1916-17

EDWARD L. KOPAS
23046 Summerland
North Olmsted, Ohio 44070

PARTS PRICE LIST

for the

OWEN MAGNETIC

MODEL M-25

THE BAKER R & L COMPANY
CLEVELAND, OHIO

AGENCIES IN ALL PRINCIPAL CITIES

PARTS PRICE LIST *for the*
OWEN MAGNETIC
MODEL M-25

THE BAKER R & L COMPANY
CLEVELAND, OHIO

AGENCIES IN ALL PRINCIPAL CITIES

INDEX TO ASSEMBLIES

	Page
Axle—front	7
Axle—rear	9 and 11
Accelerator	27
Air Control Switch Rods	29
Battery	29
Battery cradle	29
Brake countershaft and rods	27
Brakes—foot	25
Body Fittings	32
Chassis frame	11
Carburetor	15
Controller	19
Drag link	7
Dash board	29
Enclosures	31
Electrical—miscellaneous	31
Fenders	29
Gas engine	13 and 14
Gas tank and line	29
Hood	31
Horn	31
Instrument board	29
Levers—reverse gear	25
Levers—hand brake	25
Lamps	32
Lamp brackets	32
Muffler and exhaust	27
Magneto	15
Propeller shaft	23
Pan	31
Reverse gear	23
Resistance Coil	32
Running board	31
Radiator	11
Springs and shackles	11
Steering gear	21
Spark advance countershaft	21
Spark control rods	21
Splashers	31
Transmission—electric	17 and 19
Tools—special	32
Universal joints	23
Wheels	5

INDEX TO ILLUSTRATIONS

	Page
Axle—front	6
Axle—rear	8
Accelerator	28
Brakes—foot	28
Chassis frame	10
Controller	18
Countershaft and rods	26
Countershaft—spark and gas	28
Drag link	6
Gas engine	12 and 24
Gas tank and line	30
Hubs—wood wheel, front	6
Hubs—wood wheel, rear	8
Levers—hand brake	26
Levers—reverse gear	26
Propeller shaft and universal joints	22
Reverse gear	22
Steering gear	20
Springs	10
Transmission—electric	4 and 16

STANDARD WARRANTY

WE WARRANT each new motor vehicle manufactured by us to be free from defects in material and workmanship under normal use and service, our obligation under this warranty being limited to making good at our factory any part or parts thereof which shall, within ninety (90) days after delivery of such vehicle to the original purchaser, be returned to us with transportation charges prepaid, and which our examination shall disclose to our satisfaction to have been thus defective; this warranty being expressly in lieu of all other warranties expressed or implied and of all other obligations or liabilities on our part, and we neither assume nor authorize any other person to assume for us any other liability in connection with the sale of our vehicles.

This warranty shall not apply to any vehicle which shall have been repaired or altered outside of our factory in any way so as, in our judgment, to affect its stability or reliability, nor which has been subject to misuse, negligence or accident.

We make no warranty whatever in respect to tires, rims, ignition apparatus, horns or other signaling devices, batteries, speedometers or other trade accessories, inasmuch as they are usually warranted separately by their respective manufacturers.

INSTRUCTIONS

When ordering parts always specify:

1. **Whether to be shipped by freight, express or parcel post.**
2. **When ordering by letter give part number and name, by telegraph use code word.**
3. **Car number (see plate on dash board).**
4. **Model of car (Coupe, Touring, Limousine, Landaulet).**

INFORMATION

Orders from individuals, or dealers not having established credit arrangements, which are not accompanied by cash, will be sent C. O. D.

Our prices are F. O. B. shipping point, and our responsibility ceases when parts are delivered in good condition to the transportation companies.

We reserve the right to change any price at any time without notice.

Left side of car is side on which driver sits.

TELEGRAPHIC CIPHER CODE

WHEN ordering parts, or obtaining information by telegraph, we advise the use of the Telegraphic Cipher Code which follows. Great stress is laid upon the fact that the Cipher words must be spelled correctly. Unless this caution is taken the Cipher Code will be valueless.

Ka.....Advise us by telegraph when you can ship our order.
Kabd.....Blue-print will be mailed.
Kabf.....Enter our order for.....
Kabl.....Have you shipped our order.....
Kabt.....In shipping give preference over all other to order.....
Kabu.....Instructions by mail.
Kabw.....Mail blue print of.....
Kabx.....Mail photograph of.....
Kaby.....Our order.....not yet received.
Kabz.....Send tracer for shipment at once.
Kac.....Please send explicit shipping instructions.
Kacd.....Referring to our letter of.....
Kace.....Referring to your letter of.....
Kacf.....Referring to our telegram of.....
Kacg.....Referring to your telegram of.....
Kacj.....Ship immediately by express.
Kack.....Ship immediately by freight.
Kadd.....We have entered your order.....and will ship as soon as possible.
Kade.....We have shipped your order.
Kadk.....We have none of the goods you order in stock.
Kadm.....We will ship.....
Kadt.....When will you ship our order.....
Kadv.....Will ship in.....days.
Kadw.....Will ship in.....weeks.
Kaec.....Your telegram was received after goods had been shipped.
Kaed.....For car number.

EXPLANATION OF CODE

For convenience and expedition in the ordering of parts, we provide a code word for each part shown. The code word, and car number, is the only description needful when ordering parts by wire.

In addition we provide a cipher code covering all ordinary instructions, questions and answers in relation to shipments of parts.

For illustration:—An order for shipment by express of one front axle spindle bushing, lower, and one valve chamber plug gasket for car No. 440, when codified would read as follows:—

KACJ, one MUBDA, one MUFGI, KAED four hundred forty.

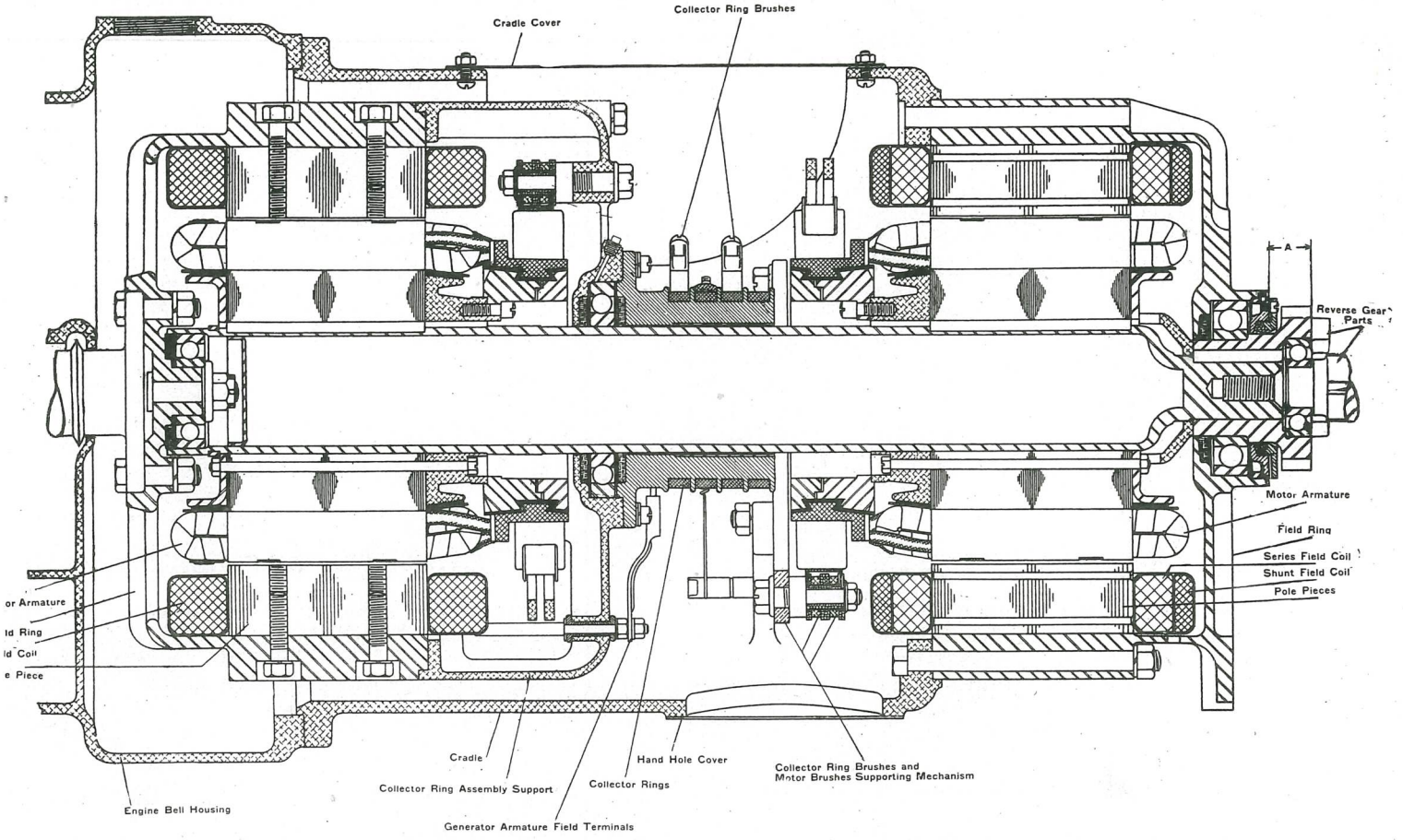

Electric Transmission—Section View

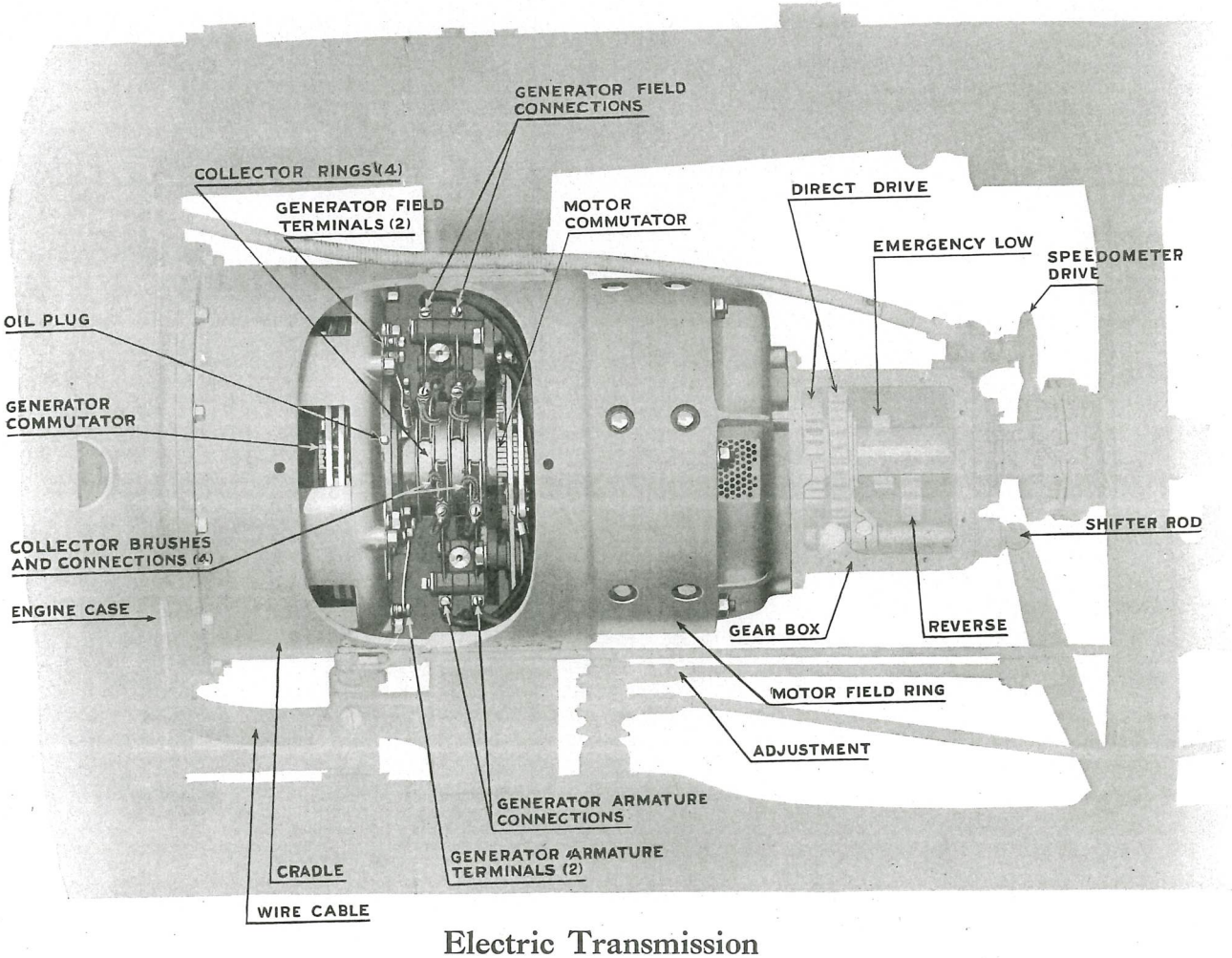

Electric Transmission

Group One

Front Wire Wheel Group

CODE WORD	PART No.	No. USED	NAME	PRICE EACH
Muabx	GA-138-X	2	Front wheel with outer hub, rim, lock ring and spoke parts	$ 20.00
Muaba	GA-121-XR	1	Front wheel hub, right hand, complete with drive pins, inner and outer bearings complete. (Bearing races pressed in hub)	16.00
Muabe	GA-121-XL	1	Front wheel hub, left hand, complete with drive pins, inner and outer bearings complete. (Bearing races pressed in hub)	16.00
Muabi	GA-121-B	12	Front wheel hub drive pin	.10
Muabo	GA-102	2	Front wheel hub outer bearing (also listed in front axle group)	4.50
Muabu	GA-103	2	Front wheel hub inner bearing (also listed in front axel group)	5.50
Muaca	GA-122-XR	1	Front wheel hub cap, right hand, with name plate and lock	3.65
Muace	GA-122-XL	1	Front wheel hub cap, left hand, with name plate and lock	3.65
Muaci	GA-136-A	22	Wire spoke, outer	.15
Muaco	GA-136-B	44	Wire spoke, inner	.15
Muacu	GA-139-A	66	Nipple	.15

Extra for painting wheels to specifications, $2.50. If painting not specified, wheels will be furnished in lead priming.

Houk wire wheel, 34"x4½" used when specified. Specify if straight side or clincher is desired.

Rear Wire Wheel Group

CODE WORD	PART No.	No. USED	NAME	PRICE EACH
Muadx	GA-138-X	2	Rear wheel with outer hub, rim, lock ring and spoke parts	$ 20.00
Muada	GA-84-X	2	Rear wheel hub complete with inner and outer bearings complete, felt retainer and felt. (Bearing races pressed in hub)	20.00
Muade	GA-4	4	Rear wheel hub bearing (also listed in rear axle group)	5.00
Muadi	GA-7-A	2	Rear wheel hub bearing felt retainer	.75
Muado	GA-7-B	2	Rear wheel hub bearing dust washer	.10
Muadu	GA-7-C	2	Rear wheel hub bearing felt retainer lock ring	.10
Muaea	X-3099	2	Rear wheel hub bearing felt washer	.25
Muaei	GA-83-XR	1	Rear wheel hub flange, right hand, with pins	10.00
Muaeo	GA-83-XL	1	Rear wheel hub flange, left hand, with pins	10.00
Muaeu	GA-121-B	12	Rear wheel hub drive pin	.10
Muafa	GA-90	2	Rear wheel brake drum	8.50
Muafe	X-6157	12	Rear wheel brake drum bolt	.10
Muafi	X-3627	12	Rear wheel brake drum bolt nut	.05
Muafo	GA-84-D	12	Rear wheel brake drum bolt bushing	.15
Muafu	GA-122-XR	1	Rear wheel hub cap, right hand, with name plate and lock	3.65
Muaga	GA-122-XL	1	Rear wheel hub cap, left hand, with name plate and lock	3.65
Muage	GA-136-A	22	Wire spoke, outer	.15
Muagi	GA-136-B	44	Wire spoke, inner	.15
Muago	GA-139-A	66	Nipple	.15

Extra for painting wheels to specifications, $2.50. If painting not specified, wheels will be furnished in lead priming.

Houk wire wheel, 34"x4½" used when specified. Specify if straight side or clincher is desired.

Front Wood Wheel Group

CODE WORD	PART No.	No. USED	NAME	PRICE EACH
Muahx	GA-164-X	2	Front wheel with band, hub complete with inner and outer bearings, hub flange	$ 23.75
Muaha	GA-164-A	2	Front wheel consisting of spokes, felloe and band	6.00
Muahe	GA-116-X	2	Front wheel hub complete with inner and outer bearings complete. (Bearing races pressed in hub.)	16.00
Muahi	GA-102	2	Front wheel hub outer bearing (also listed in front axle group)	4.50
Muaho	GA-103	2	Front wheel hub inner bearing (also listed in front axle group	5.50
Muahu	GA-116-B	2	Front wheel hub flange	1.75
Muaia	X-2181	12	Front wheel hub bolt	.10
Muaie	X-3522	12	Front wheel hub bolt nut	.05
Muaio	GA-118-X	2	Front wheel hub cap with name plate	3.00
Muaiu	X-4428	2	Front hub oiler	.15

Extra for painting wheels to specifications or natural wood finish, $2.50. If painting not specified, wheels will be furnished in lead priming.

Rear Wood Wheel Group

CODE WORD	PART No.	No. USED	NAME	PRICE EACH
Muajx	GA-165-X	2	Rear wheel with band, hub complete with felt retainer, inner and outer bearings, hub flange and brake drum	$ 31.50
Muaja	GA-165-A	2	Rear wheel consisting of spokes, felloe and band	6.00
Muaje	GA-86-X	2	Rear wheel hub complete with inner and outer bearings complete and felt retainer. (Bearing races pressed in hub.)	20.00
Muaji	GA-4	4	Rear wheel hub bearing (also listed in rear axle group)	5.00
Muajo	GA-7-A	2	Rear wheel hub bearing felt retainer	.75
Muaju	GA-7-B	2	Rear wheel hub bearing dust washer	.10
Muaka	GA-7-C	2	Rear wheel hub bearing dust washer lock ring	.10
Muake	X-3099	2	Rear wheel hub bearing felt washer	.25
Muaki	GA-86-B	2	Rear wheel hub flange	1.50
Muako	GA-85-A	12	Rear wheel hub stud	.15
Muaku	GA-85-B	12	Rear wheel hub stud nut, outer	.15
Muala	GA-85-C	12	Rear wheel hub stud washer, outer	.05
Muale	X-3692	12	Rear wheel hub stud washer, inner	.05
Muali	GA-118-X	2	Rear wheel hub cap with name plate	3.00
Mualo	GA-90	2	Rear wheel brake drum	8.50

Extra for painting wheels to specifications or natural wood finish, $2.50. If painting not specified, wheels will be finished in lead priming.

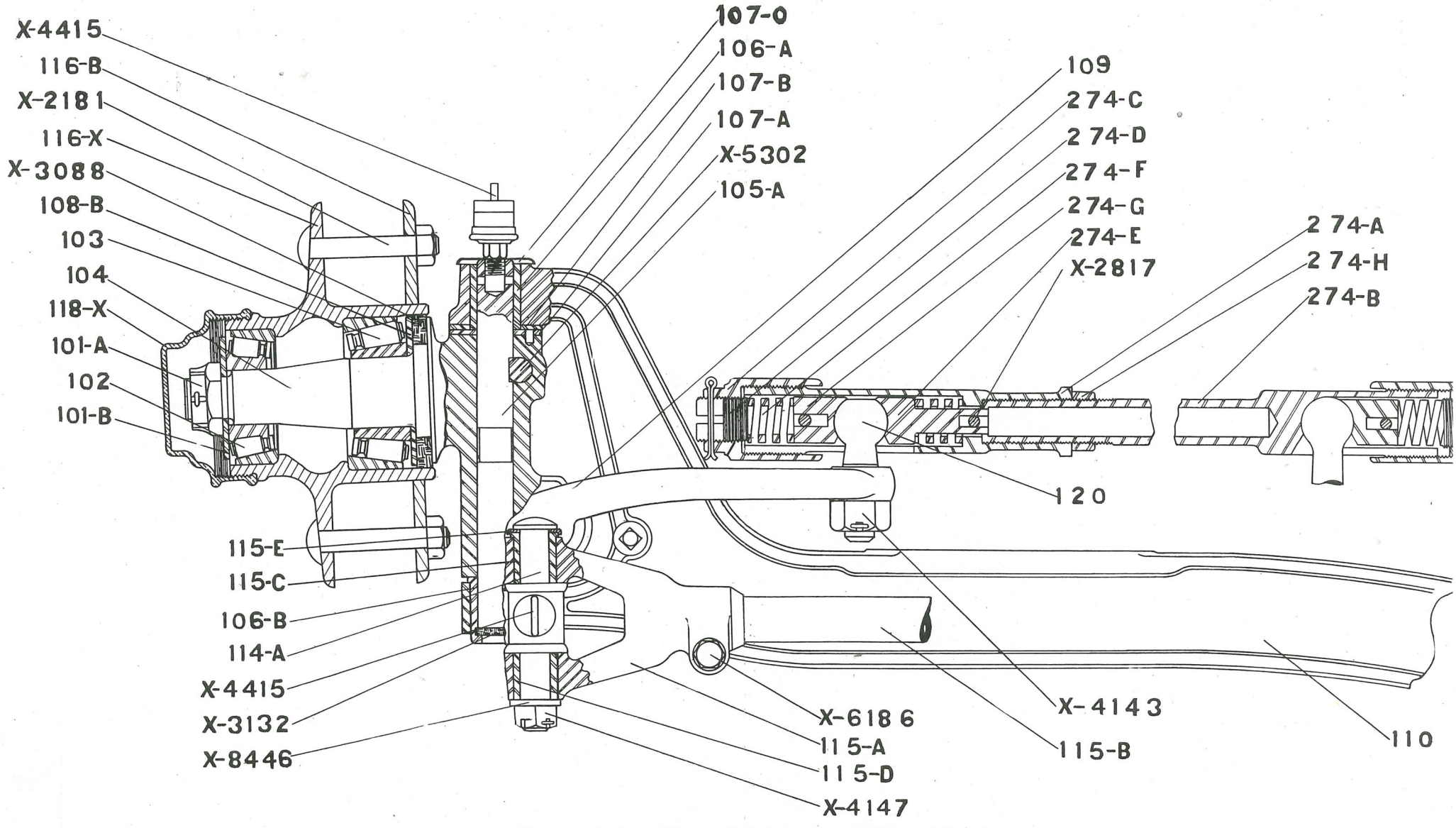

Front Axle—Drag Link—Wood Wheel Hub

Group Two

Front Axle Group

CODE WORD	PART No.	No. USED	NAME	PRICE EACH
Mubax	GA-110-X	1	**Front axle complete with spindle nuts, felt retainer, steering arms and tie rod, and without bearings or cones**	$ 95.00
Mubae	GA-110	1	**Front axle I beam**	35.00
Mubai	GA-104-R	1	**Front axle spindle, right hand, with bushings**	10.00
Mubao	GA-104-L	1	**Front axle spindle, left hand, with bushings**	10.00
Mubau	GA-101-AR	1	Front axle spindle nut, right hand	.25
Mubca	GA-101-AL	1	Front axle spindle nut, left hand	.25
Mubce	GA-101-B	2	Front axle bearing retainer washer	.25
Mubci	GA-108-B	2	Front axle spindle felt retainer	.25
Mubco	X-3088	2	Front axle spindle felt	.25
Mubcu	GA-106-A	2	Front axle spindle bushing, upper	.65
Mubda	GA-106-B	2	Front axle spindle bushing, lower	.75
Mubde	X-3132	2	Front axle spindle bushing plug	.05
Mubdi	GA-107-A	2	Front axle spindle lower washer	.15
Mubdo	GA-107-B	2	Front axle spindle upper washer	.15
Mubdu	GA-107-C	2	Front axle spindle dust cap	.05
Mubea	GA-105-A	2	Front axle spindle bolt	2.00
Mubei	X-5302	2	Front axle spindle draw key	.10
Mubeo	X-4415	2	Front axle spindle bolt grease cup	.50
Mubeu	GA-109-R	1	**Front axle steering arm, right hand**	4.50
Mubfa	GA-109-L	1	**Front axle steering arm, left hand**	8.00
Mubfe	X-3895	2	Front axle steering arm key	.10
Mubfo	X-4134	2	Front axle steering arm nut	.25
Mubfu	X-4415	2	Front axle steering arm grease cup	.50
Mubga	GA-120	1	Front axle steering arm ball pin	1.00
Mubge	X-4143	1	Front axle steering arm ball pin nut	.15
Mubgi	GA-115-B	1	**Front axle tie rod**	3.50
Mubgo	GA-115-A	2	Front axle tie rod yoke with bushings	3.50
Mubgu	GA-115-C	2	Front axle tie rod yoke bushing, upper	.35
Mubha	GA-115-D	2	Front axle tie rod yoke bushing, lower	.35
Mubhe	GA-115-E	2	Front axle tie rod yoke dust cap	.05
Mubhi	GA-114-A	2	Front axle tie rod yoke bolt	1.00
Mubho	X-4147	2	Front axle tie rod yoke bolt nut	.10
Mubhu	X-8446	2	Front axle tie rod yoke bolt washer	.05
Mubia	X-5301	2	Front axle tie rod yoke draw key	.10
Mubie	X-6186	2	Front axle tie rod clamp bolt	.15
Mubio	X-3550	2	Front axle tie rod clamp bolt nut	.05
Mubiu	X-2253	2	Front axle spindle stop screw	.10
Mubja	X-3540	4	Front axle spindle stop screw nut	.05
Mubje	GA-102	2	Front axle outer bearing complete	4.50
Mubji	GA-103	2	Front axle inner bearing complete (Bearings also listed in wheel group)	5.50
Mubjo	GA-119-R	1	Front axle tie rod boot, right	1.00
Mubju	GA-119-L	1	Front axle tie rod boot, left	1.00
			FRONT AXLE FASTENINGS	
Mubka	GA-111-CR	1	Front spring plate, right hand	$ 2.00
Mubke	GA-111-CL	1	Front spring plate, left hand	2.00
Mubki	X-3944	4	Front spring clip and nuts	.50

Group Two—A

Drag Link Group

CODE WORD	PART No.	No. USED	NAME	PRICE EACH
Mublx	GA-274-X	1	**Drag Link Complete**	$ 9.65
Mubla	GA-274-B	1	Drag link tube and end	3.50
Muble	GB-274-A	1	Drag link tube adj. end	1.25
Mubli	GB-274-C	2	Drag link end cap	.75
Mublo	GB-274-D	2	Drag link end adj. screw plug	.35
Mubpa	GB-274-E	1	Drag link ball seat, inner	.50
Mubpe	GB-274-G	2	Drag link ball seat, outer	.50
Mubpi	GB-274-F	3	Drag link buffer spring	.25
Mubpo	GB-274-H	1	Drag link end lock nut	.15
Mubpu	X-2837	2	Drag link end cap taper pin, 2-inch	.10
Mubra	X-2817	1	Drag link end cap taper pin, 1¾-inch	.10
Mubre	GA-273-A	1	Drag link boot, front	1.00
Mubri	GA-273-B	1	Drag link boot, rear	1.00

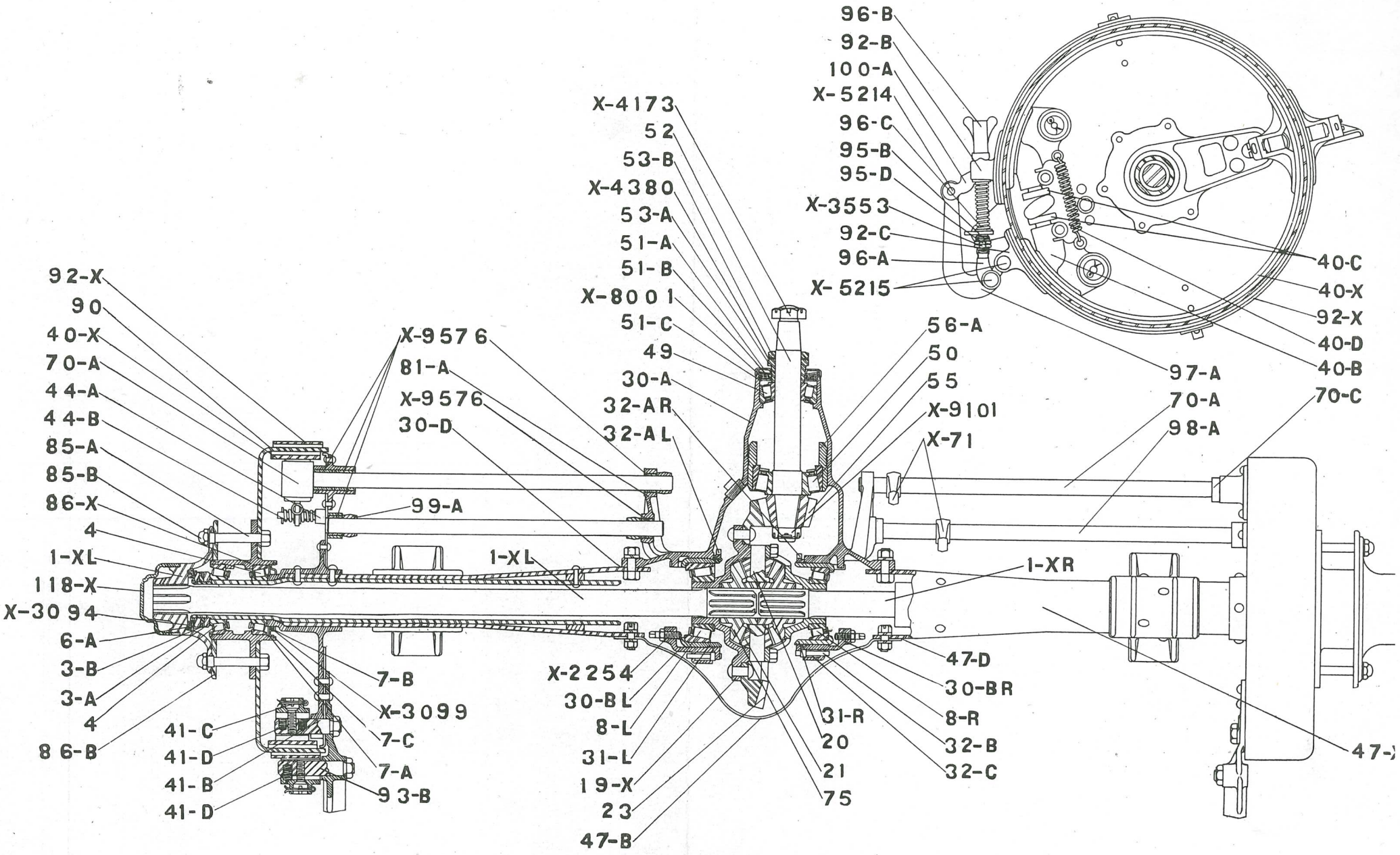

Rear Axle—Wood Wheel Hub

Group Three

Rear Axle Group

CODE WORD	PART No.	No. USED	NAME	PRICE EACH
Mucax	GA-25-X	1	**Rear axle complete with spring seats, axle and pinion shaft nuts, key and lock washer, and without hub bearings**	$ 360.00
Mucae	GA-19-X	1	**Rear axle differential case, complete with cap screws**	18.00
Mucai	X-6218	12	Differential case cap screw	.10
Mucao	GA-8-R	1	Differential bearing complete, right hand	5.00
Mucau	GA-8-L	1	Differential bearing complete, left hand	6.25
Mucba	GA-31-R	1	Differential bearing cup carrier, right hand	2.00
Mucbe	GA-31-L	1	Differential bearing cup carrier, left hand	2.00
Mucbi	GA-32-AR	1	Differential bearing adj. ring, right hand	1.50
Mucbo	GA-32-AL	1	Differential bearing adj. ring, left hand	1.50
Mucbu	GA-32-B	2	Differential bearing adj. ring lock pin	.15
Mucda	GA-32-C	2	Differential bearing adj. ring lock pin spring	.05
Mucde	GA-30-BR	1	Differential bearing cap, right hand	1.50
Mucdi	GA-30-BL	1	Differential bearing cap, left hand	1.50
Mucdo	X-6215	4	Differential bearing cap cap screw	.15
Mucdu	GA-30-A	1	Differential carrier and pinion shaft housing	25.00
Mucea	X-6214	10	Differential carrier bolt, short	.10
Mucei	X-6213	4	Differential carrier bolt, long	.10
Muceo	X-3692	14	Differential carrier bolt nut	.05
Muceu	GA-30-D	1	Differential carrier gasket	.15
Mucfa	X-2254	2	Differential carrier steady screw	.05
Mucfe	X-3697	2	Differential carrier steady screw nut	.05
Mucfi	X-4624	1	Differential peep hole plug	.05
Mucfo	GA-20	1	Differential pinion spider	7.50
Mucfu	GA-21	4	Differential pinion	2.50
Mucga	GA-75	2	Differential gear	6.50
Mucge	GA-23	1	**Rear axle driving gear (4-1-12: 1-gear ratio —49 teeth, furnished only in set with pinion GA-55)**	20.00
Mucgi	GA-52	1	Pinion shaft	7.50
Mucgo	GA-62-X	1	**Rear axle center complete with differential, pinion shaft, bearings, adjusting rings and carrier**	175.00
Mucgu	GA-55	1	**Pinion (4-1-12: 1-gear ratio — 12 teeth furnished only in set with GA-23)**	10.00
Mucha	X-9101	1	Pinion shaft nut, rear	.15
Muche	X-3868	1	Pinion shaft key	.10
Muchi	X-4173	1	Pinion shaft nut, front	.25
Mucho	GA-49	1	Pinion shaft front bearing, complete	5.50
Muchu	GA-50	1	Pinion shaft rear bearing, complete	8.50
Mucia	GA-59-A	1	Pinion shaft rear bearing adj. hole cover	.25
Mucie	GA-59-B	1	Pinion shaft rear bearing adj. hole cover, felt	.05
Mucio	X-1009	2	Pinion shaft rear bearing adj. hole cover screw	.05
Muciu	GA-53-A	1	Pinion shaft bearing spacing nut	1.25
Mucja	GA-53-B	1	Pinion shaft bearing jamb nut	.65
Mucje	X-4380	1	Pinion shaft bearing jamb nut lock washer	.05
Mucji	GA-56-A	1	Pinion shaft rear bearing carrier	2.00
Mucjo	GA-56-B	1	Pinion shaft rear bearing carrier oil retainer	.05
Mucju	X-6224	1	Pinion shaft rear bearing clamp bolt	.25
Mucka	X-4143	1	Pinion shaft rear bearing clamp bolt nut	.10
Mucke	GA-51-A	1	Pinion shaft dust collar	.15
Mucki	GA-51-B	1	Pinion shaft dust collar felt retainer, outer	.10
Mucko	GA-51-C	1	Pinion shaft dust collar felt retainer, inner	.10
Mucku	X-8001	1	Pinion shaft dust collar felt washer	.15
Mucla	X-4415	1	Pinion shaft front bearing grease cup	.50
Mucle	GA-6-A	2	Rear axle sleeve oil retainer, outer	.10
Mucli	X-3094	2	Rear axle sleeve oil retainer felt—wood wheel	.25
Muclo	X-3095	2	Rear axle sleeve oil retainer felt—wire wheel	.25
Muclu	GA-1-XR	1	Rear axle drive shaft and plate, right hand, wood wheels	12.50
Mucma	GA-1-XL	1	Rear axle drive shaft and plate, left hand, wood wheels	$ 12.50
Mucme	GA-1-R	1	Rear axle drive shaft, right hand, wire wheels	8.00
Mucmi	GA-1-L	1	Rear axle drive shaft, left hand, wire wheels	8.00
Mucmo	GA-83-XR	1	Rear axle drive flange with pins, right hand, wire wheels	10.00
Mucna	GA-83-XL	1	Rear axle drive flange with pins, left hand, wire wheels	10.00
Mucne	GA-121-B	12	Rear axle drive flange pins	.15
Mucni	GA-2-B	2	Rear axle drive shaft plate gasket	.05
Mucno	GA-3-A	4	Rear axle hub bearing lock nut	.75
Mucoa	GA-3-B	2	Rear axle hub bearing lock nut lock washer	.25
Mucoe	GA-47-X	1	Rear axle housing complete with spring seats, dust shields, brake spiders and all riveted parts	85.00
Mucoi	FA-47-B	1	Rear axle housing cover	2.50
Mucou	X-6217	14	Rear axle housing cover cap screw	.10
Mucpa	X-3540	14	Rear axle housing cover cap screw nut	.05
Mucpe	GA-47-D	1	Rear axle housing cover gasket	.50
Mucpi	GA-47-F	1	Rear axle housing cover filler hole plug	.25
Mucpo	X-4625	1	Rear axle housing cover overflow hole plug	.05
Mucpu	X-4626	1	Rear axle housing drain hole plug	.10
Mucqa	GA-40-X	2	Brake band with lining, hand brake internal	5.00
Mucqe	GA-40-E	2	Brake band lining	2.50
Mucqi	GA-40-BR	2	Brake band end, right hand, upper; left hand, lower	1.25
Mucqu	GA-40-BL	2	Brake band end, left hand, upper; right hand, lower	1.25
Mucra	GA-40-C	4	Brake band cam plate	.50
Mucre	X-6216	4	Brake band cam plate clamp bolt	.10
Mucri	GA-40-D	2	Brake band contracting spring	.10
Mucro	GA-41-B	2	Brake band anchor pin	.50
Mucru	X-3619	2	Brake band anchor pin nut	.05
Mucsa	GA-41-C	2	Brake band adj. stop	.25
Mucse	GA-41-D	4	Brake band release spring	.05
Mucsi	GA-44-A	4	Brake band anti-rattle pin	.10
Mucso	X-8470	4	Brake band anti-rattle pin washer	.05
Mucsu	GA-44-B	8	Brake band anti-rattle spring	.05
Mucta	X-8452	4	Brake band anti-rattle washer, outer	.05
Mucte	X-8454	8	Brake band anti-rattle washer, inner	.05
Mucti	GA-70-AR	1	Brake band cam shaft right hand	3.50
Mucto	GA-70-AL	1	Brake band cam shaft, left hand	3.50
Muctu	X-9576	4	Brake band cam shaft, bushings, outer end	.50
Mucua	GA-70-C	1	Brake band cam shaft collar	.25
Mucue	GA-71	2	Brake band cam lever	1.00
Mucui	X-5301	2	Brake band cam lever draw key	.10
Mucuo	GA-81-AR	1	Brake band cam shaft bracket, inner right hand with bushing	2.50
Mucva	GA-81-AL	1	Brake band cam shaft bracket, inner left hand with bushing	2.50
Mucve	X-9576	4	Brake band cam shaft bracket bushing	.50
Mucvi	GA-92-X	2	Brake band with lining {foot brake}	4.50
Mucvo	GA-92-E	2	Brake band lining {external}	2.50
Mucwa	GA-92-B	2	Brake band end, upper	.50
Mucwe	GA-92-C	2	Brake band end, lower	.50
Mucwi	GA-93-B	2	Brake band anchor pin	.25
Mucwo	X-3619	2	Brake band anchor pin nut	.05
Mucxa	GA-41-C	2	Brake band adj. stop	.20
Mucxe	GA-41-D	2	Brake band release spring	.05
Mucxi	GA-96-A	2	Brake band adj. clevis	1.25
Mucxo	GA-96-B	2	Brake band adj. clevis nut	.25
Mucxu	GA-96-C	2	Brake band expanding spring	.05

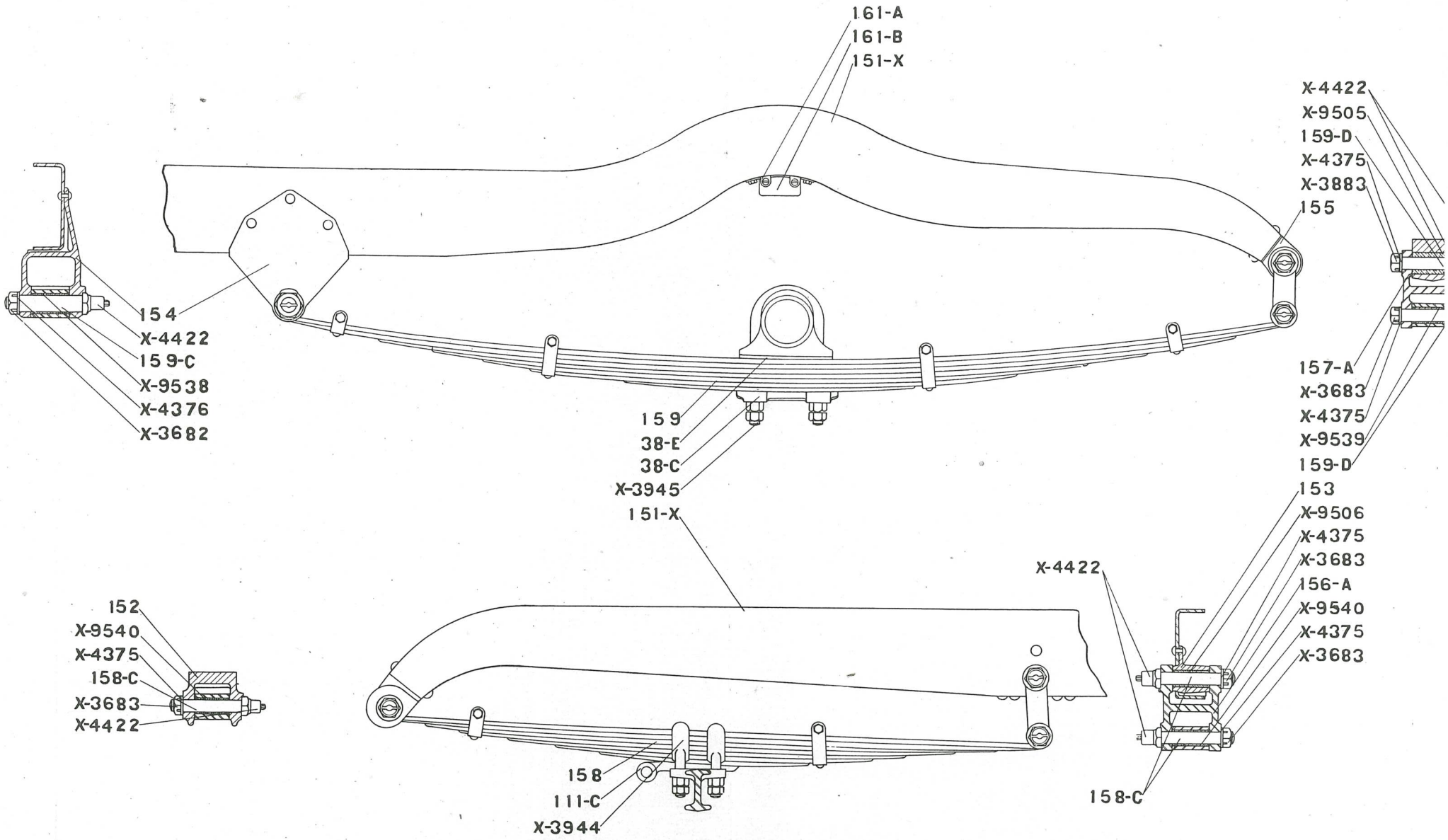

Chassis Frame and Springs

Group Three—Continued

Rear Axle Group—Continued

CODE WORD	PART No.	No. USED	NAME	PRICE EACH
Mucya	X-8452	2	Brake band expanding spring washer, upper	$ .05
Mucye	X-8453	2	Brake band expanding spring washer, lower	.05
Mucyi	GA-96-D	2	Brake band stop nut	.05
Mucyo	X-3553	2	Brake band joint nut	.05
Mucyu	X-5215	2	Brake band clevis pin	.10
Mucab	GA-95-B	2	Brake band support stud	.40
Mucac	X-3552	2	Brake band support stud nut	.05
Mucad	GA-97-AR	1	Brake band operating lever, right hand	1.50
Mucaf	GA-97-AL	1	Brake band operating lever, left hand	1.50
Mucag	X-5215	2	Brake band operating lever clevis pin	.10
Mucah	GA-98-AR	1	Brake band rocker shaft, right hand	1.00
Mucaj	GA-98-AL	1	Brake band rocker shaft, left hand	1.00
Mucak	GA-98-B	1	Brake band rocker shaft collar	.25
Mucal	GA-71	2	Brake band inner lever	1.00
Mucam	GA-99-A	2	Brake band outer lever	1.00
Mucan	X-5301	4	Brake band lever draw key	.10
Mucap	GA-100-A	2	Brake connecting link	.40
Mucaq	GA-100-B	2	Brake connecting link anti-rattler	.10
Mucar	X-5214	4	Brake connecting link pin	.10
Mucas	GA-4	4	Rear wheel hub bearing	5.00
			REAR AXLE FASTENINGS	
Mucat	GA-38-C	2	Rear spring plate	$ 1.50
Mucav	X-3945	4	Rear spring clip and nuts	.75
Mucaw	GA-38-E	2	Rear spring shim	.25

Group Four

Chassis Frame Group

CODE WORD	PART No.	No. USED	NAME	PRICE EACH
Mudax	GA-151-X	1	**Chassis frame with spring hangers, bushings, front and rear cross tubes and brackets and rear engine and electric transmission hangers**	$ 100.00
Mudae	GA-152-R	1	Front spring, front hanger, right hand	3.00
Mudai	GA-152-L	1	Front spring, front hanger, left hand	3.00
Mudao	GA-153	2	Front spring rear hanger with bushings	2.75
Mudau	X-9506	2	Front spring rear hanger bushing	.50
Mudca	GA-154	2	Rear spring front hanger	4.50
Mudce	GA-155-R	1	Rear spring rear hanger with bushings, right hand	3.25
Mudci	GA-155-L	1	Rear spring rear hanger with bushings, left hand	3.25
Mudco	X-9505	2	Rear spring rear hanger bushings	1.00
Mudcu	GA-162-X	2	Cross tube and brackets, front	5.00
Mudea	GA-163-X	2	Cross tube and brackets, rear	4.50
Mudei	GA-601-C	2	Engine hanger, rear	2.50
Mudeo	GA-601-C	2	Electric Transmission hanger	2.50

Group Four—A

Front Spring and Shackle Group

CODE WORD	PART No.	No. USED	NAME	PRICE EACH
Mudfa	GA-158	2	**Front spring complete with bushings and center bolt**	$ 15.00

Front Spring and Shackle Group—Continued

CODE WORD	PART No.	No. USED	NAME	PRICE EACH
Mudfe	X-9540	4	Front spring bushing	$ .50
Mudfi	X-1626	2	Front spring center bolt with nut	.20
			FASTENINGS FOR FRONT SPRING	
Mudfo	GA-156-A	2	Front spring shackle	$ 2.50
Mudfu	GA-158-C	6	Front spring bolt	1.00
Mudga	X-3683	6	Front spring bolt nut	.10
Mudge	X-4375	6	Front spring bolt nut lock washer, per doz.	.25
Mudgi	X-4422	6	Front spring bolt grease cup	.35

Rear Spring and Shackle Group

CODE WORD	PART No.	No. USED	NAME	PRICE EACH
Mudgo	GA-159	2	**Rear spring complete with bushings and center bolt**	$ 25.00
Mudge	GAA-159	2	Rear spring complete with bushings and center bolt (Coupe)	25.00
Mudha	X-9538	2	Rear spring front bushing	.50
Mudhe	X-9539	2	Rear spring rear bushing	.50
Mudhi	X-1627	2	Rear spring center bolt with nut	.15
			FASTENINGS FOR REAR SPRING	
Mudho	GA-157-A	2	Rear spring shackle	$ 2.50
Mudhu	GA-159-D	4	Rear spring shackle bolt	1.00
Mudia	X-3683	4	Rear spring shackle bolt nut	.10
Mudie	X-4375	4	Rear spring shackle bolt nut lock washer, per doz	.25
Mudio	GA-161-A	2	Rear spring bumper plate	.10
Mudiu	GA-161-B	2	Rear spring rear bumper	.50
Mudja	X-1071	4	Rear spring rear bumper bolt and nut	.10
Mudje	GA-161-C	4	Rear spring rear bumper bushing	.10
Mudji	GA-159-C	2	Rear spring bolt	1.25
Mudjo	X-3682	2	Rear spring bolt nut	.15
Mudju	X-4376	2	Rear spring bolt nut lock washer, per doz	.25
Mudjl	X-4422	6	Rear spring bolt nut grease cup	.35

Group Five

Radiator Group

CODE WORD	PART No.	No. USED	NAME	PRICE EACH
Mueae	GA-200-X	1	**Radiator with strainer, less filler cap**	$ 100.00
Mueai	GA-200-D	1	Radiator strainer	.35
Mueao	GB-809	1	Radiator filler cap	2.00
Mueau	X-3140	1	Radiator filler cap gasket	.05
Mueba	GB-238	1	Radiator motometer (Boyce)	10.00
			FASTENING FOR RADIATOR	
Muebe	GA-207-C	1	Radiator brace rod	$ .25
Muebi	X-1037	2	Radiator brace rod bolt	.10
Muebo	X-3625	2	Radiator brace rod bolt nut	.05
Muebu	GA-207-D	2	Radiator brace rod clevis	.75
Mueca	X-3625	2	Radiator brace rod clevis lock nut	.05
Muece	GA-207-A	1	Radiator brace rod bracket	.50
Mueci	X-2304	2	Radiator brace rod bracket bolt	.10
Mueco	GA-601-D	2	Radiator shim	.10
Muecu	X-6110	2	Radiator cap screw	.10
Mueda	GA-201-B	1	Radiator inlet hose	.50
Muede	GA-201-C	2	Radiator inlet hose clamp	.15
Muedi	GA-202-B	1	Radiator outlet hose	.50
Muedo	GA-202-C	2	Radiator outlet hose clamp	.15
Muedu	GA-202-D	1	Radiator outlet hose coil	.50

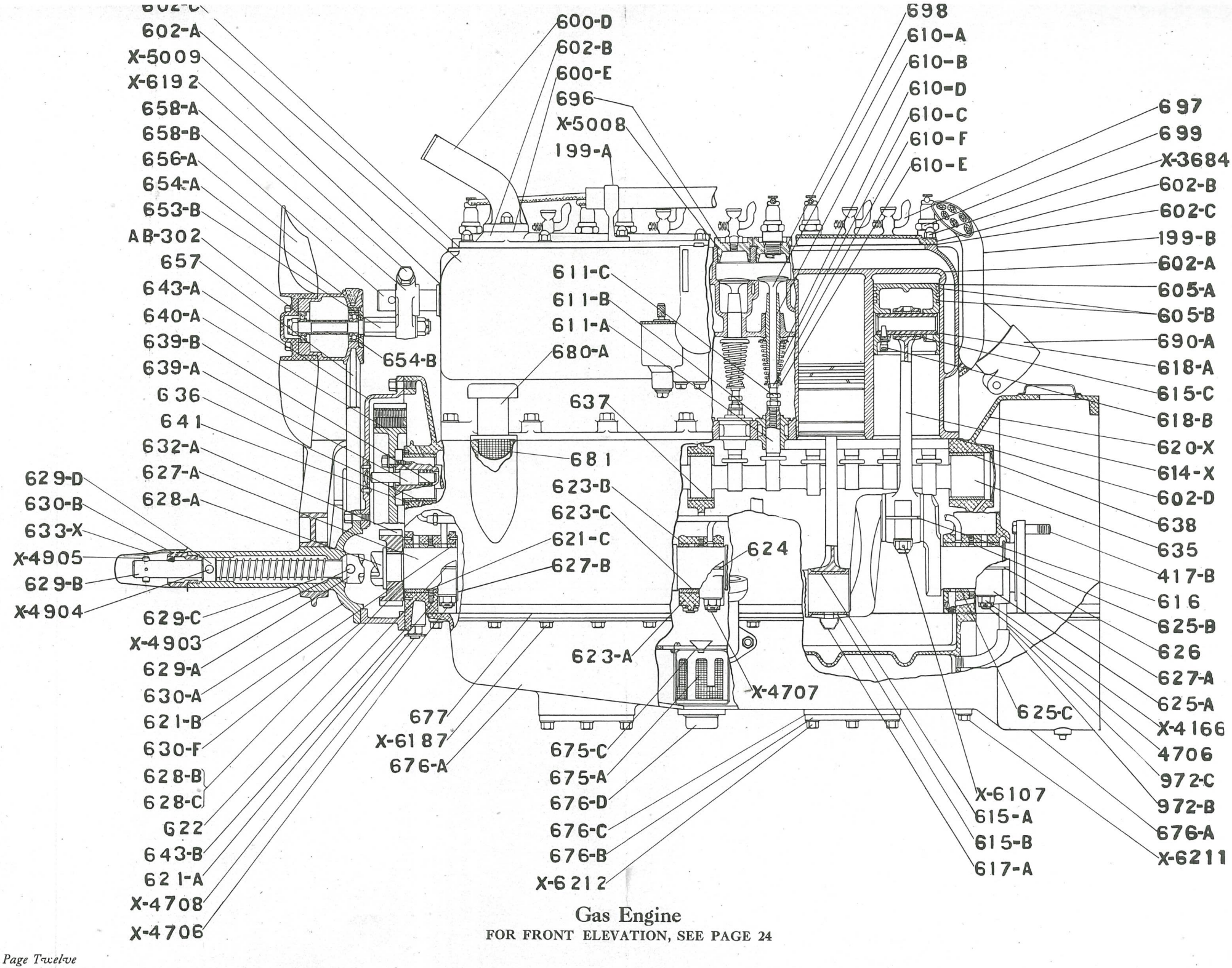

Gas Engine

FOR FRONT ELEVATION, SEE PAGE 24

Group Six

Gas Engine Group

CODE WORD	PART No.	No. USED	NAME	PRICE EACH
Mufax	GA-600-X	1	**Engine, complete, less Magneto, Carburetor and Tire Pump**	$ 750.00
Mufae	GA-602-A	1	**Cylinder block**	90.00
Mufai	GA-602-B	1	Cylinder cover	3.50
Mufao	GA-600-D	1	Cylinder cover water outlet	1.25
Mufau	GA-600-E	1	Cylinder cover water outlet gasket	.05
Mufba	GA-602-C	1	Cylinder cover gasket	.25
Mufbe	GA-602-D	1	Cylinder cover joint gasket	.10
Mufbi	X-4700	14	Cylinder cover stud, short	.15
Mufbo	X-4701	2	Cylinder cover stud, long	.15
Mufbu	X-3684	16	Cylinder cover stud, nut	.15
Mufca	GA-697	6	Cylinder priming cup	.75
Mufce	GA-603-A	2	Cylinder side plate	2.00
Mufci	GA-603-B	2	Cylinder side plate gasket	.40
Mufco	X-4702	4	Cylinder cover stud	.10
Mufcu	X-4800	4	Cylinder cover stud lock ring	.05
Mufda	X-5006	4	Cylinder cover stud gasket	.10
Mufde	GA-603-D	4	Cylinder cover stud nut	.10
Mufdi	GA-604-X	4	Drain hole screen and flange	.25
Mufdo	GA-610-A	12	**Valve**	1.75
Mufdu	GA-610-B	12	Valve guide	1.00
Mufea	GA-610-C	12	Valve spring	.40
Mufei	GA-610-D	12	Valve spring cup, upper	.10
Mufeo	GA-610-E	12	Valve spring cup, lower	.10
Mufeu	GA-610-F	12	Valve spring cup retainer	.10
Mufga	GA-696	6	Valve chamber plug, exhaust	1.00
Mufge	GA-698	6	Valve chamber plug, inlet	1.00
Mufgi	X-5008	12	Valve chamber plug gasket	.10
Mufgo	GA-699	6	Spark plug and gasket	.50
Mufgu	GA-611-A	12	Valve push rod	1.25
Mufha	GA-611-B	12	Valve push rod guide	1.00
Mufhe	GA-611-D	6	Valve push rod guide crab	.15
Mufhi	X-8440	6	Valve push rod guide crab washer	.05
Mufho	GA-611-C	12	Valve push rod adjusting screw	.25
Mufhu	X-3625	12	Valve push rod adjusting screw nut	.05
Mufia	GA-199-B	1	Ignition conduit	3.00
Mufie	GA-199-A	2	Ignition conduit tube bracket, cylinder block	1.00
Mufio	X-1619	3	Ignition conduit tube bracket screw	.10
Mufiu	GA-199-C	1	Ignition conduit tube plug	.15
Mufja	GA-199-D	1	Ignition conduit bracket, bell housing	1.00
Mufje	GA-199-E	1	Ingition conduit bracket spacer	.10
Mufji	X-1131	1	Ignition conduit bracket screw	.10
Mufjo	GA-605-A	6	**Piston**	6.00
Mufju	GA-605-B	18	Piston ring	.50
Mufka	GA-618-A	6	Piston wrist pin	.75
Mufke	GA-618-B	6	Piston wrist pin lock screw	.25
Mufki	GA-614-X	6	**Connecting rod and cap, with upper bushing**	8.50
Mufko	GA-615-A	6	Connecting rod lower bushing, upper half	1.50
Mufku	GA-615-B	6	Connecting rod lower bushing, lower half	1.50
Mufla	GA-615-C	6	Connecting rod bushing, piston end	1.75
Mufle	X-2045	24	Connecting rod screw	.10
Mufli	X-4908	24	Connecting rod dowel pin, per dozen	.15
Muflo	X-6107	12	Connecting rod clamp screw	.40
Muflu	GA-616-A	12	Connecting rod shim .002″	.05
Mufma	GA-616-B	24	Connecting rod shim .003″	.05
Mufme	GA-616-C	72	Connecting rod shim .004″	.05
Mufmi	GA-616-D	36	Connecting rod shim $\frac{1}{32}$″	.05
Mufmo	GA-617-A	6	Connecting rod dipper	.10
Mufmu	GA-690-A	1	**Exhaust manifold**	15.00
Mufna	GA-690-B	1	Exhaust manifold gasket, center	.25
Mufne	GA-690-C	4	Exhaust manifold gasket	.15

CODE WORD	PART No.	No. USED	NAME	PRICE EACH
Mufni	X-4703	12	Exhaust manifold stud	$ .10
Mufno	X-3504	12	Exhaust manifold stud nut	.05
Mufnu	X-4703	2	Carburetor stud	.10
Mufoa	X-3554	2	Carburetor stud nut	.05
Mufoe	GA-208-A	1	Carburetor gasket	.05
Mufoi	GA-620-X	1	**Crank case complete with studs and cam shaft bearings**	150.00
Mufou	X-4704	8	Crank case stud, short	.10
Mufpa	X-4705	6	Crank case stud, long	.10
Mufpe	X-3506	14	Crank case stud nut	.05
Mufpi	X-4706	4	Crank case rear bearing stud	.20
Mufpo	X-4707	4	Crank case middle bearing stud	.20
Mufpu	X-4708	2	Crank case front bearing stud, long	.20
Mufqa	X-4706	2	Crank case front bearing stud, short	.20
Mufqe	X-4166	12	Crank case bearing stud nut	.10
Mufqi	X-8473	12	Crank case bearing stud washer	.05
Mufqo	GA-676-A	1	**Oil pan with baffle** (stamped steel type)	40.00
Mufqu	X-4628	1	Oil pan drain plug	.25
Mufra	GA-677	1	Oil pan gasket	.15
Mufre	X-6183	30	Oil pan cap screw	.05
Mufri	X-8474	30	Oil pan cap screw copper washer, per dozen	.15
Mufro	GA-680-A	1	Oil pan breather cap	.35
Mufru	X-4916	1	Oil pan breather cap pin	.05
Mufsa	GA1-676-A	1	**Oil pan** (aluminum casting)	60.00
Mufse	GA1-676-D	1	Oil pan drain plug	.25
Mufsi	GA1-677	1	Oil pan gasket	.50
Mufso	GA1-676-B	2	Oil pan hand hole cover	.50
Mufsu	GA1-676-C	2	Oil pan hand hole cover gasket	.20
Mufta	X-6212	16	Oil pan hand hole cover cap screw	.20
Mufte	X-6187	32	Oil pan cap screw, short	.10
Mufti	X-6211	4	Oil pan cap screw, long	.10
Mufto	X-8474	36	Oil pan cap screw copper washer, per dozen	.10
Muftu	GA-682-A	1	Oil pan breather cap spring	.10
Mufua	GA-682-B	1	Oil pan breather cap spring screen	.05
Mufue	GA-681	1	Oil filler screen	.15
Mufui	GA-683-X	1	Oil indicator complete	2.50
Mufuo	GA-683-L	1	Oil indicator glass	.15
Mufva	GA-685-B	1	Oil indicator gasket	.05
Mufvi	X-4720	2	Oil indicator stud	.05
Mufve	X-3554	2	Oil indicator stud nut	.05
Mufvo	GA-627-A	1	**Crank shaft**	75.00
Mufwa	GA-632-A	1	Crank shaft gear	5.00
Mufwe	X-3882	1	Crank shaft key	.10
Mufwi	GA-628-B	4	Crank shaft thrust shim .002″, per dozen	.15
Mufwo	GA-628-C	4	Crank shaft thrust shim .008″, per dozen	.15
Mufxa	GA-627-B	1	Crank shaft thrust washer	.60
Mufxe	GA-628-A	1	Crank shaft starting claw	1.00
Mufxi	GA-417-B	6	Bolts (crankshaft to generator field ring)	.10
Mufxo	X-3628	6	Nuts (crankshaft to generator field ring)	.05
Mufxu	GA-621-A	1	**Crank shaft front bearing cap**	4.50
Mufya	GA-621-B	1	Crank shaft front bearing, upper	2.00
Mufye	GA-621-C	1	Crank shaft front bearing, lower	2.00
Mufyi	X-2046	2	Crank shaft front bearing screw	.05
Mufyo	GA-622-A	6	Crank shaft front bearing shim .002″, per doz.	.15
Mufyu	GA-622-B	2	Crank shaft front bearing shim .003″, per doz.	.15
Mufza	GA-622-C	12	Crank shaft front bearing shim .004″, per doz.	.15
Mufze	GA-622-D	2	Crank shaft front bearing shim $\frac{1}{32}$″, per doz.	.15
Mufzi	GA-622-E	2	Crank shaft front bearing shim $\frac{1}{16}$″, per doz.	.15
Mufzo	GA-623-A	1	**Crank shaft center bearing cap**	2.25
Mufzu	GA-623-B	1	Crank shaft center bearing, upper	2.00
Mufab	GA-623-C	1	Crank shaft center bearing, lower	2.00

Group Six—Continued

Gas Engine Group—Continued

CODE WORD	PART No.	No. USED	NAME	PRICE EACH
Mufac	X-2046	2	Crank shaft center bearing screw	$ .05
Mufad	GA-624-A	6	Crank shaft center bearing shim .002", per dozen	.15
Mufag	GA-624-B	2	Crank shaft center bearing shim .003", per dozen	.15
Mufah	GA-624-C	12	Crank shaft center bearing shim .004", per dozen	.15
Mufaj	GA-624-D	2	Crank shaft center bearing shim .$\frac{1}{32}$", per doz.	.15
Mufak	GA-624-E	2	Crank shaft center bearing shim .$\frac{1}{16}$", per doz.	.15
Mufal	GA-625-A	1	**Crank shaft rear bearing cap**	4.25
Mufam	GA-625-B	1	Crank shaft rear bearing, upper	2.25
Mufan	GA-625-C	1	Crank shaft rear bearing, lower	2.25
Mufap	X-2046	2	Crank shaft rear bearing screw	.05
Mufaq	GA-626-A	6	Crank shaft rear bearing shim .002", per doz.	.15
Mufar	GA-626-B	2	Crank shaft rear bearing shim .003", per doz.	.15
Mufas	GA-626-C	12	Crank shaft rear bearing shim .004", per doz.	.15
Mufat	GA-626-D	2	Crank shaft rear bearing shim $\frac{1}{32}$", per doz.	.15
Mufav	GA-626-E	2	Crank shaft rear bearing shim .$\frac{1}{16}$", per doz.	.15
Mufaw	GA-635	1	**Cam shaft**	20.00
Mufay	GA-640-A	1	Cam shaft gear	10.00
Mufdc	X-6189	3	Cam shaft gear cap screw	.10
Mufdg	GA-641	1	Cam shaft thrust washer	.05
Mufdh	X-4914	1	Cam shaft thrust washer dowel pin, per doz.	.15
Mufdj	GA-636	1	Cam shaft front bearing	1.00
Mufdk	GA-637	1	Cam shaft center bearing	1.00
Mufdl	GA-638	1	Cam shaft rear bearing	1.00
Mufdm	X-4914	3	Cam shaft bearing dowel pin, per doz	.15
Mufdn	GA-639-A	1	Cam shaft thrust button	.20
Mufdp	GA-639-B	1	Cam shaft thrust button spring	.05
Mufdq	X-8471	1	Cam shaft thrust button washer	.05
Mufdr	GA-639-C	1	Cam shaft thrust button plate	.15
Mufds	GA-639-D	6	Cam shaft thrust button shim	.10
Mufdt	GA-643-A	1	**Gear case cover**	7.50
Mufdv	GA-643-B	1	Gear case cover gasket	.50
Mufdw	X-6190	11	Gear case cover cap screw	.10
Mufdy	GA-730-X	1	**Tire pump complete with gear, less hose**	10.00
Mufeb	GA-734	1	Tire pump support	2.00
Mufec	X-1002	4	Tire pump support cap screw	.10
Mufed	GA-737	1	Tire pump gear driver	3.00
Mufef	GA-656-A	1	**Fan**	6.00
Mufeh	GA-658-A	1	Fan bracket	1.25
Mufej	X-6192	1	Fan bracket bolt	.10
Mufek	GA-658-B	1	Fan bracket stud	.75
Mufel	X-5009	1	Fan bracket stud gasket	.05
Mufem	AB-302	2	Fan bearing	3.40
Mufen	GA-653-B	1	Fan shaft	1.50
Mufep	X-4132	1	Fan shaft nut, outer	.10
Mufeq	X-4172	1	Fan shaft nut, inner	.10
Mufer	GA-653-C	1	Fan shaft bearing spacer	.35
Mufes	X-4431	1	Fan hub oiler	.15
Mufet	GA-655	1	Fan pulley driver	2.00
Mufev	X-3875	1	Fan pulley key	.05
Mufew	X-9102	1	Fan pulley nut	.05
Mufey	GA-654-A	1	Fan pulley driven	3.50
Mufgc	GA-654-B	1	Fan bearing felt retainer	.50
Mufgd	X-8005	1	Fan bearing felt	.10
Mufgh	GA-657	1	Fan belt	2.00
Mufgk	GA-648-X	1	**Water pump complete with stuffing box less shaft**	15.00
Mufgl	GA-648-A	1	Water pump body	4.00
Mufgm	GA-648-B	1	Water pump cover	2.50

CODE WORD	PART No.	No. USED	NAME	PRICE EACH
Mufgn	GA-650-A	1	Water pump cover bushing	$ .75
Mufgr	X-4915	1	Water pump cover bushing pin	.05
Mufgs	GA-648-C	1	Water pump cover gasket	.05
Mufhc	X-6191	4	Water pump body cap screw	.10
Mufhd	GA-648-D	1	Water pump gasket	.05
Mufhg	X-4616	1	Water pump drain cock	.35
Mufhj	GA-649-A	1	Water pump paddle	1.50
Mufhk	X-3881	1	Water pump paddle key	.05
Mufhl	X-2816	1	Water pump paddle taper pin	.05
Mufhm	X-4429	1	Water pump grease cup	.75
Mufhn	GA-650-B	1	Water pump packing nut, female	.50
Mufhr	GA-650-C	1	Water pump packing nut, male	.50
Mufhs	GA-650-D	1	Water pump packing	.15
Mufib	GA-650-F	1	Water pump packing nut gland	.25
Mufic	GA-650-E	1	Water pump stuffing box gland	.25
Mufid	GA-645-A	1	Water pump drive shaft	3.50
Mufif	GA-645-B	1	Water pump drive shaft bushing	3.00
Mufig	X-4915	1	Water pump drive shaft bushing pin	.05
Mufih	GA-645-C	1	Water pump drive shaft collar	.75
Mufij	X-2817	1	Water pump drive shaft collar pin	.05
Mufik	GA-646-A	1	Water pump drive shaft gear	2.50
Mufil	GA-646-B	1	Water pump drive shaft gear oil thrower	.10
Mufim	X-3875	1	Water pump drive shaft key	.05
Mufin	X-8472	4	Water pump drive shaft shim .008", per doz.	.15
Mufip	X-4709	2	Water pump stud	.05
Mufiq	X-3554	2	Water pump stud nut	.05
Mufir	GA-660-X	1	Inlet water pipe and flange to cylinder	3.00
Mufis	GA-660-C	1	Inlet water pipe flange gasket	.05
Mufit	X-6193	2	Inlet water pipe flange cap screw	.10
Mufiv	GA-661-A	1	Water pump outlet hose	.25
Mufiw	GA-661-B	1	Water pump outlet hose clamp	.10
Mufiy	GA-193-A	1	Magneto coupling, drive end	.50
Mufjb	GA-193-B	1	Magneto coupling, magneto end	.50
Mufjc	GA-193-C	1	Magneto coupling ring	.50
Mufjd	X-3880	1	Magneto coupling key, magneto end	.05
Mufjg	X-3881	1	Magneto coupling key, drive end	.05
Mufjh	X-2801	1	Magneto coupling taper pin	.05
Mufjk	GA-191	1	Magneto shim	2.00
Mufjl	X-6115	4	Magneto shim cap screw	.10
Mufjm	GA-665-A	1	**Oil pump body**	1.50
Mufjn	X-6182	2	Oil pump body cap screw	.10
Mufjr	GA-665-B	1	Oil pump plunger	.50
Mufjs	GA-665-C	1	Oil pump plunger spring	.05
Mufjt	GA-665-D	1	Oil pump body gasket	.05
Mufju	X-4606	2	Oil pump plug, $\frac{1}{8}$" pipe	.05
Mufkc	X-4605	1	Oil pump plug, $\frac{1}{4}$" pipe	.05
Mufkd	X-4300	1	Oil pump bronze ball, $\frac{3}{8}$"	.05
Mufkg	X-4299	1	Oil pump bronze ball, $\frac{1}{4}$"	.05
Mufkj	X-4918	2	Oil pump valve stop pin	.05
Mufkl	GA-667-A	2	Oil tube packing	.05
Mufkm	GA-667-B	2	Oil tube packing retainer	.05
Mufkn	GA-667-C	2	Oil tube clamp nut	.05
Mufkr	GA-669-A	2	Oil tube clip, large	.05
Mufks	GA-669-B	3	Oil tube clip, small	.05
Muflc	GA-670-A	1	Oil gallery tube	.75
Mufld	GA-670-B	1	Oil tube, pump to gallery	.25
Muflg	GA-670-C	1	Oil tube to front bearing	.25
Muflh	GA-670-D	1	Oil tube to center bearing	.25
Muflj	GA-671-A	1	Oil tube connector, male	.25
Muflk	GA-671-B	1	Oil tube connector, female	.25
Muflm	GA-672	1	Oil tube to gear case	.50

Group Six—Continued

Gas Engine Group—Continued

CODE WORD	PART No.	No. USED	NAME	PRICE EACH
Mufln	GA-673-A	1	Oil relief body	$ .25
Muflp	X-4299	1	Oil relief body bronze ball	.05
Muflr	GA-673-B	1	Oil relief spring	.05
Mufls	GA-673-C	1	Oil relief body plug	.05
Muflt	GA-674	1	Oil tube, pump to pan	.50
Muflv	GA-675-A	1	Oil screen cylinder and bottom	.75
Muflw	GA-675-C	1	Oil screen cover and funnel	1.00
Mufly	GA-972-B	1	Rear bearing oil drain receiving tube	1.00
Mufob	GA-972-C	1	Rear bearing oil drain telescoping tube	.50
Mufoc	GA-629-A	1	**Starting crank jaw**	1.00
Mufod	GA-629-B	1	Starting crank shaft	1.00
Mufof	X-4903	1	Starting crank jaw pin	.05
Mufog	GA-629-C	1	Starting crank spring	.10
Mufoh	GA-629-D	1	Starting crank shaft collar	.35
Mufoj	X-4904	1	Starting crank shaft collar pin	.05
Mufok	X-4905	1	Starting crank pin	.15
Mufol	GA-630-A	1	Starting crank housing	4.00
Mufom	GA-630-F	1	Starting crank housing gasket	.05
Mufon	X-6188	4	Starting crank housing cap screw, long	.10
Mufop	X-6187	3	Starting crank housing cap screw, short	.10
Mufoq	GA-630-B	1	Starting crank housing bushing	.50
Mufor	GA-633-X	1	Starting crank cover	.50
Mufos	GA-631		Starting crank	2.00

ENGINE MOUNTING

Mufot	GA-601-A	1	Engine hanger, front	$ 15.00
Mufov	GA-601-BR	1	Engine hanger frame filler, right hand	1.50
Mufow	GA-601-BL	1	Engine hanger frame filler, left hand	1.50
Mufoy	X-6096	4	Engine hanger bolt, front	.15
Mufrc	X-3628	4	Engine hanger bolt nut	.05
Mufrd	X-6097	4	Engine hanger rear bolt	.15
Mufrg	X-4132	4	Engine hanger rear bolt nut	.05
Mufrh	X-4610-A	1	Engine hanger front grease cup extension	.05
Mufrj	X-4610-B	1	Engine hanger front grease cup extension coupling	.05
Mufrl	X-4419	1	Grease cup	.50

Group Six—A

Carburetor Group

CODE WORD	PART No.	No. USED	NAME	PRICE EACH
Mufsb	GA-210-X	1	**Carburetor complete (Zenith)**	$ 30.00
Mufsc	GA-510-A	1	Main jet (No. 105)	.75
Mufsd	X-3145	1	Fibre washer	.05
Mufsg	GA-510-B	1	Cap jet	.55
Mufsh	X-3145	1	Fibre washer	.05
Mufsj	X-5111	1	Jet wrench	.35
Mufsk	GA-501-B	1	Float cover	1.50
Mufsl	GA-502-A	1	Float	.90
Mufsm	GA-501-C	1	Cover spring and button	.20
Mufsn	GA-501-D	1	Cover spring screw	.10
Mufsp	GA-506-A	1	Union body	.75
Mufsr	X-3147	1	Fibre washer	.05
Mufst	GA-503-C	2	Valve lever weight	.20
Mufsw	GA-503-D	2	Valve lever axle	.10
Mufsy	GA-503-A	1	Needle valve	.45

Group Six—A Continued

Carburetor Group—Continued

CODE WORD	PART No.	No. USED	NAME	PRICE EACH
Muftc	GA-503-B	1	Needle valve collar	$ .15
Muftd	GA-503-E	1	Needle valve cap	.20
Muftg	GA-504-A	1	Needle valve seat	.20
Mufth	X-3150	1	Fibre washer	.05
Muftj	GA-512-A	2	Lower plug	.20
Muftk	X-3148	2	Fibre washer	.05
Muftl	GA-515-A	1	Compensator (No. 115)	.35
Muftm	X-3151	1	Fibre washer	.05
Muftn	GA-511-A	1	Choke tube (No. 22)	1.50
Muftp	GA-508-B	1	Priming plug	.50
Muftr	GA-505-A	1	Filter screen	.10
Mufts	GA-505-B	1	Filter plug	.20
Mufub	X-3146	1	Fibre washer	.05
Mufuc	GA-508-A	1	Secondary well (No. 60)	.35
Mufud	X-3149	3	Body plug washer	.05
Mufuf	GA-509-A	1	Slow speed screw	.15
Mufug	GA-509-B	1	Slow speed screw seat	.25
Mufuh	GA-514-A	1	Butterfly shaft and lever	1.00
Mufuj	GA-513-A	1	Butterfly	1.10
Mufuk	GA-212-A	1	Air manifold	4.00
Muful	GA-212-B	1	Air distributor	1.50
Mufum	GA-212-D	1	Air distributor spring	.15
Mufun	GA-212-E	1	Hot air intake	.60

For illustration see cut "Zenith" Instruction book, page 15.

For other than small replacements or adjustments it is recommended that a new carburetor be purchased and the old one returned to the factory for repairs and credit.

Group Six—B

Magneto Group

CODE WORD	PART No.	No. USED	NAME	PRICE EACH
Mufup	GB-190-X	1	**Magneto complete, less cables**	$ 60.00
Mufuq	GB-1345-X	1	Interrupter complete	7.50
Mufur	GB-1370-X	1	Interrupter housing complete with timing arm.	3.00
Mufus	GB-1320-X	1	Distributing plate complete	9.50
Mufut	GB-1320-E	6	Distributing plate terminal nuts	.12
Mufuy	GB-1326-B	1	Distributing brush and spring	.25
Mufyc	GB-1346-B	1	Platinum contact screw, long	1.50
Mufyd	GB-1345-B	1	Platinum contact screw, short	1.50
Mufyh	GB-1335-X	1	Conducting bar	.60
Mufyk	GB-1333-X	1	Slip-ring brush holder complete	1.00
Mufyl	GB-1340-X	1	Grounding terminal complete	.50
Mufym	GB-1315-B	1	Catch spring for distributor plate	.20

For illustration, see page 29, "Bosch" Instruction Book. This book also contains a complete listing of magneto parts. When conditions permit it is recommended that all repairs and replacements be handled through the nearest "Bosch" service station.

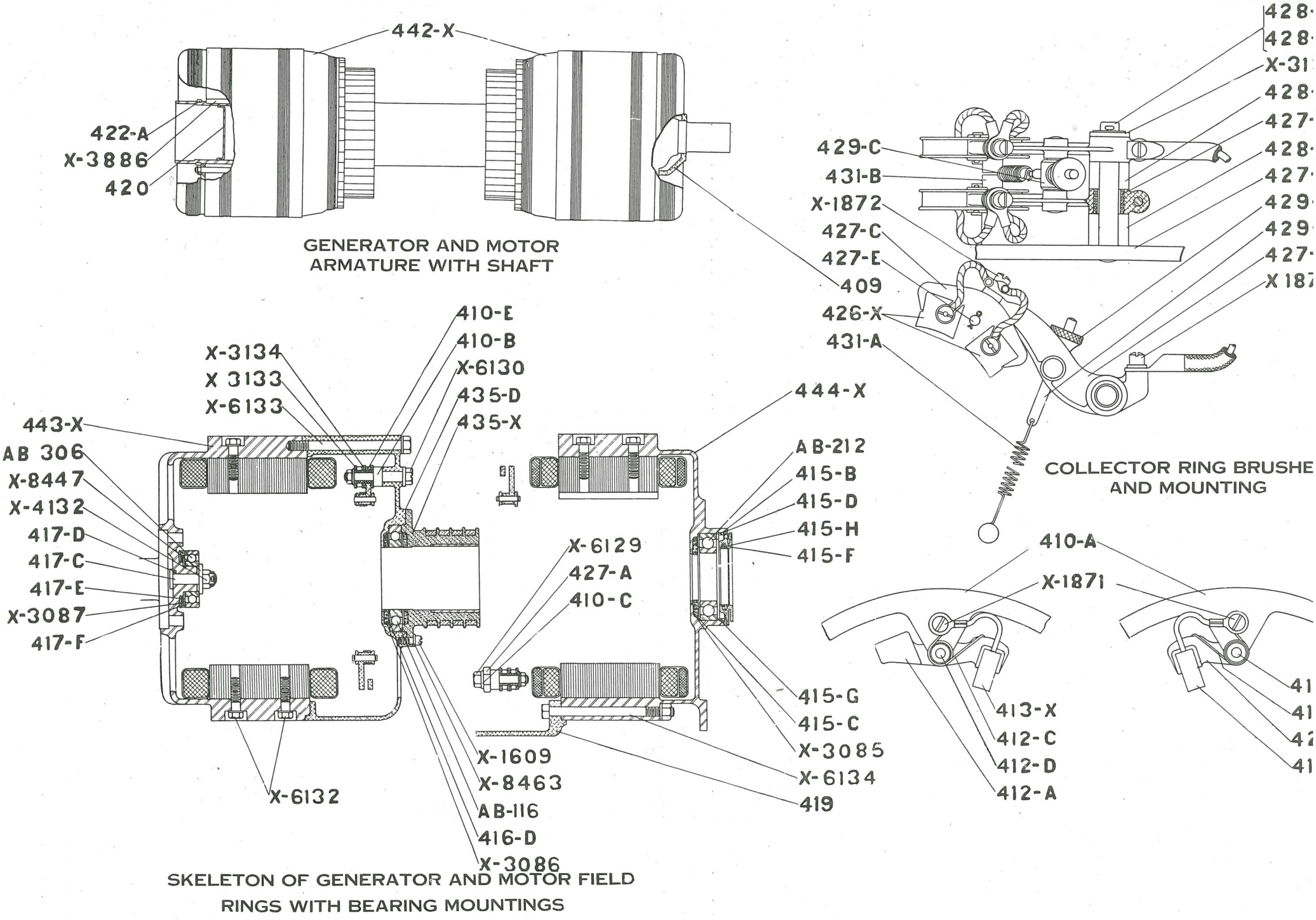

Electric Transmission—Sectional View

Group Seven

Electric Transmission

CODE WORD	PART No.	No. USED	NAME	PRICE EACH
Mugax	GB-401-X	1	**Electric transmission complete, less cradle, gear and front and rear attaching bolts**	$ 875.00
Mugae	GB-443-X	1	**Generator field with field ring, coils, pole pieces, spider and all revolving parts**	200.00
Mugai	GB-444-X	1	**Motor field with field ring, coils, pole pieces. (In shipping include spacer GB-409 and complete bearing packing parts)**	125.00
Mugao	GB-442-X	1	**Generator and motor armatures with shaft**	300.00
Mugau	GB-435-X	1	**Generator collector ring**	30.00
Mugba	AB-306	1	**Transmission front bearing**	6.50
Mugbe	X-3087	1	Transmission front bearing felt washer	.10
Mugbi	GB-417-E	1	Transmission front bearing felt retainer, small.	.10
Mugbo	GB-417-F	1	Transmission front bearing felt retainer, large.	.10
Mugbu	X-8447	1	Transmission front bearing felt retainer washer	.10
Mugca	X-4132	1	Transmission front bearing felt retainer nut	.05
Mugce	GB-417-C	1	Transmission front bearing retaining bolt and nut	.50
Mugci	GB-417-D	1	Transmission front bearing retaining bolt pin	.10
Mugco	AB-116	1	**Transmission center bearing**	19.50
Mugcu	X-3086	2	Transmission center bearing felt washer	.15
Mugda	GB-416-D	2	Transmission center bearing felt washer retainer	.15
Mugde	AB-212	1	**Transmission rear bearing**	11.50
Mugdi	GB-415-B	1	Transmission rear bearing spring ring (Not used on threaded ring)	.50
Mugdo	X-3085	1	Transmission rear bearing felt washer	.15
Mugdu	GB-415-C	1	Transmission rear bearing felt washer retainer.	.15
Mugea	GB-415-D	1	Transmission rear bearing retainer (Specify if threaded on outside)	3.50
Mugei	GBI-415-F	1	Transmission rear bearing packing ring	3.50
Mugeo	X-1730	1	Transmission rear bearing packing ring lock screw	.05
Mugeu	GBI-415-G	1	Transmission rear bearing thrust washer (Not used on threaded ring)	.15
Mugfa	GBI-415-H	1	Transmission rear bearing packing. For renewal of rear bearing grease retaining parts in earlier cars of this series not fitted with bronze packing box, send sketch or sample of parts required.	.10
Mugfe	X-6132	12	Generator pole piece screw	.10
Mugfi	GB-414-B	2	Generator field coil terminal	.10
Mugfo	X-3695	4	Generator field coil terminal nut	.05
Mugfu	X-8464	2	Generator field coil terminal washer, inner	.05
Mugga	X-8451	4	Generator field coil terminal washer, outer	.05
Mugge	GB-416-C	4	Generator field coil terminal insulating bushing.	.05
Muggi	X-6133	6	Generator spider screw	.15
Muggo	X-4606	1	Generator spider oil plug	$ .05
Muggu	GB-435-D	1	Generator collector ring gasket	.10
Mugha	X-1609	6	Generator collector ring screw	.10
Mughe	X-8463	6	Generator collector ring screw washer	.05
Mughi	GB-410-A	4	Brush holder ring	3.00
Mugho	GB-410-B	6	Brush holder ring stud with nut	.20
Mughu	GB-410-F	6	Brush holder ring stud washer	.05
Mugia	GB-410-E	6	Brush holder ring stud insulating bushing	.10
Mugie	X-3134	6	Brush holder ring stud insulating washer, thick.	.10
Mugio	X-3133	12	Brush holder ring stud insulating washer, thin.	.10
Mugiu	X-6130	3	Generator brush holder stud screw	.15
Mugka	X-6129	3	Motor brush holder stud screw	.15
Mugke	GB-410-C	6	Brush holder ring stud screw washer	.05
Mugki	GB-412-A	6	Generator brush holder	.75
Mugko	GB-425-A	6	Motor brush holder	.75
Mugku	GB-412-CR	6	Brush holder spring, right hand	.10
Mugla	GB-412-CL	6	Brush holder spring, left hand	.10
Mugle	GB-412-D	12	Brush holder pin	.10
Mugli	X-1871	12	Brush connecting screw	.05
Muglo	GB-413-X	12	Brush with pigtail and terminal	1.00
Muglu	X-1892	2	Motor brush holder ring terminal screw	.10
Mugma	GB-411	2	Generator brush holder connector with terminals	.25
Mugme	X-1891	2	Generator brush holder connector screw	.10
Mugmi	X-1872	2	Generator brush holder connector terminal screw	.10
Mugmo	X-3528	4	Generator brush holder connector terminal screw nut	.05
Mugmu	X-8451	4	Generator brush holder connector terminal screw washer	.05
Mugna	X-8464	2	Generator brush holder connector terminal washer	.05
Mugne	GB-416-C	4	Generator brush holder connector terminal insulating bushing	.05
Mugni	GB-436-A	2	Generator armature collector ring terminal	.10
Mugno	GB-436-B	2	Generator field collector ring terminal	.10
Mugoa	GB-564-B	3	Motor series and shunt field male terminal	.10
Mugoe	X-4712	8	Motor field ring stud	.10
Mugoi	X-6132	12	Motor pole piece screw	.10
Mugou	X-6134	6	Motor field ring supporting bolt	.50
Mugpa	X-3628	6	Motor field ring supporting bolt nut	.05
Mugpe	GB-427-A	1	**Collector ring and motor brush holder support**	10.00
Mugpi	X-1727	2	Collector ring and motor brush holder support screw	.10
Mugpo	X-3627	2	Collector ring and motor brush holder support nut	.05
Mugpu	GB-428-A	1	Collector brush supporting arm stud, long	.15
Mugqa	GB-428-B	1	Collector brush supporting arm stud, short	.15
Mugqe	GB-428-D	1	Collector brush supporting arm spacer, long	.15

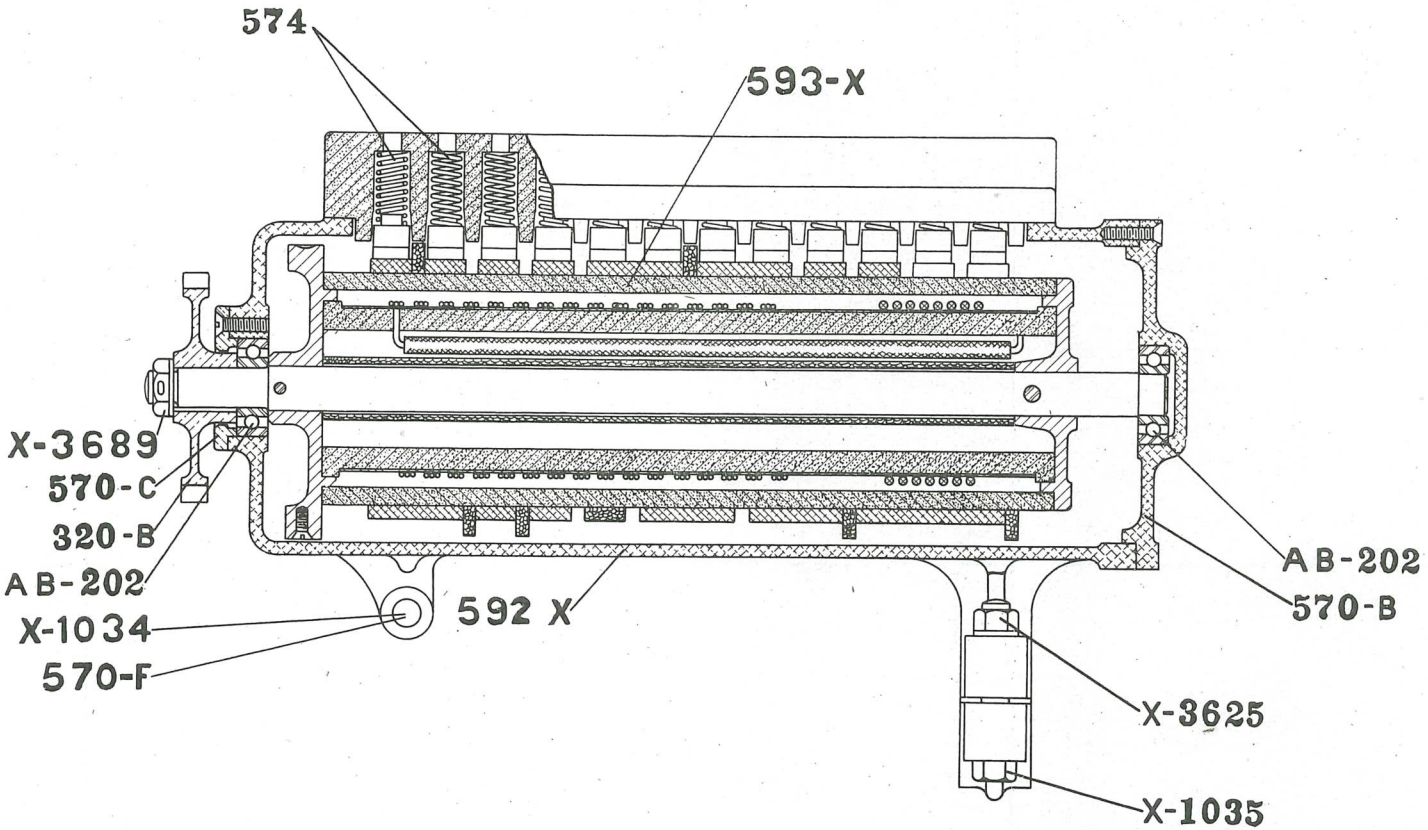
574
593-X
X-3689
570-C
320-B
AB-202
X-1034
570-F
592 X
AB-202
570-B
X-3625
X-1035

Controller

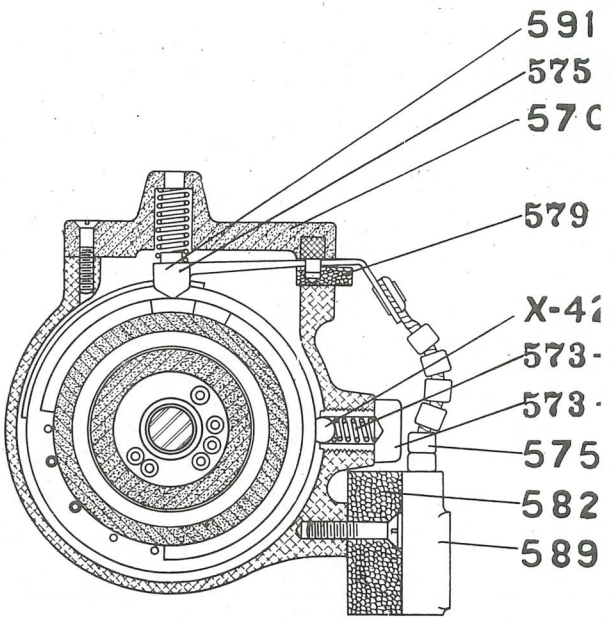
591
575
570
579
X-42
573-
573-
575
582
589

Group Seven—Continued

Electric Transmission Group

CODE WORD	PART No.	No. USED	NAME	PRICE EACH
Mugqi	GB-428-C	2	Collector brush supporting arm spacer, short..	$ .15
Mugqo	X-3136	3	Collector brush supporting arm insulating washer	.05
Mugqu	X-8449	2	Collector brush supporting arm stud washer	.05
Mugra	GB-427-C	4	**Collector brush holder**	2.50
Mugre	GB-427-B	4	Collector brush holder arm	2.00
Mugri	X-1872	4	Collector brush holder arm terminal screw	.10
Mugro	GB-427-D	4	Collector brush holder arm bushing	.10
Mugru	GB-427-E	4	Collector brush holder pin	.25
Mugsa	GB-426-XR	4	Collector brush and pigtail, right hand, with terminal	1.25
Mugse	GB-426-XL	4	Collector brush and pigtail, left hand, with terminal	1.25
Mugsi	X-1872	4	Collector brush terminal screw	.10
Mugso	GB-429-A	2	Collector brush spring adjusting rod	.15
Mugsu	GB-429-B	2	Collector brush spring adjusting rod nut	.35
Mugta	GB-429-C	2	Collector brush spring adjusting rod block	.35
Mugte	GB-431-A	2	Collector brush spring	.15
Mugti	GB-431-B	2	Collector brush spring anchor stud	.10
Mugto	X-3886	2	Armature shaft key (armature)	.15
Mugtu	X-3887	2	Armature shaft key (high speed gear)	.15
Mugua	GB-409	1	Armature shaft spacer (specify length)	2.00
Mugue	GB-422-A	1	Armature shaft spring ring	.35
Mugui	GB-420	1	Armature shaft grease retainer	.25
Muguo	GA-419	1	Transmission cradle	85.00
Mugva	GA-448	1	Transmission cradle hand hole cover	.50
Mugve	GA-449	1	Transmission cradle cover	.50

ELECTRIC TRANSMISSION MOUNTINGS

Mugvi	GA-417-B	6	Bolts (crank shaft to generator field ring)	$ .10
Mugvo	X-3628	6	Nuts (crank shaft to generator field ring)	.05
Mugwa	X-6113	12	Cap screw (cradle to bell housing)	.10
Mugwe	X-6112	2	Bolts (cradle to bell housing)	.25
Mugwi	X-3628	2	Nuts (cradle to bell housing)	.05
Mugwo	GA-445-A	2	Transmission cradle arm	9.00
Mugxa	GA-445-B	2	Transmission cradle arm frame spacer	.20
Mugxe	X-6098	2	Bolts (cradle arm to fame)—$\frac{5}{8}''$x$6\frac{1}{4}''$	.50
Mugxi	X-3667	2	Nuts (cradle arm to frame)—$\frac{5}{8}''$	.10
Mugxo	GA-445-C	2	Special washer for frame bolt—$\frac{5}{8}''$	.05
Mugxu	X-6176	2	Bolts (cradle arm to frame bracket)	.15
Mugya	X-4132	2	Nuts (cradle arm to frame bracket)	.05
Mugye	X-6160	10	Bolts (cradle arm to cradle)—$\frac{7}{16}''$x$2\frac{1}{8}''$	.10
Mugyi	X-6175	12	Bolts (cradle arm to cradle)—$\frac{7}{16}''$x$1\frac{3}{4}''$	.10
Mugyo	X-3627	12	Nuts (cradle arm to cradle)—$\frac{7}{16}''$	.05

When other than small mechanical parts are to be repaired or renewed, it is recommended that a complete transmission, or a complete assembled group be purchased and the old returned to the factory for repairs. In such cases credit will be issued for all parts in usable condition. Such action will insure proper repairs and uninterrupted service.

Group Seven—A

Controller Group

CODE WORD	PART No.	No. USED	NAME	PRICE EACH
Mugab	GA-570-X	1	**Controller complete, less pinion**	$ 110.00
Mugac	GB-593-X	1	**Controller drum with shaft and segments complete**	45.00
Mugad	GA-592-X	1	**Controller case complete with end caps, leg cap and fastening bolts**	22.50
Mugaf	GB-570-D	1	Controller case end cover	2.50
Mugag	GB-570-C	1	Controller case bearing cap	1.00
Mugah	X-1035	2	Controller case leg cap bolt	.10
Mugak	X-3625	2	Controller case leg cap bolt nut	.05
Mugal	X-1034	1	Controller case leg bolt	.10
Mugam	GB-570-F	2	Controller case leg bolt spacer	.15
Mugan	GB-570-D	1	**Controller case cover with pins**	7.50
Mugap	AB-202	2	Controller case annular bearings	2.80
Mugaq	GB-579	1	Controller case terminal strip	.75
Mugar	GB-575	10	**Controller finger (single) with pig tail and terminal**	1.00
Mugas	GB-591	1	**Controller finger (double) with pig tail and terminal**	1.50
Mugat	GB-589	11	Controller finger lead terminal	.25
Mugav	GB-575-C	88	Controller finger pig tail insulating beads, per doz	.25
Mugaw	GB-574	12	Controller finger spring	.10
Mugay	GB-582	1	Controller terminal block	.25
Mugbc	GB-573-A	1	Controller stop ball and spring socket	.50
Mugbd	GB-573-B	1	Controller stop ball spring	.10
Mugbg	X-4279	1	Controller stop ball	.05
Mugbh	GA-320-B	1	**Controller pinion**	2.00
Mugbj	X-3689	1	Controller pinion lock nut	.15
Mugbk	X-3880	1	Controller pinion key	.05

When other than small mechanical parts are to be repaired, or renewed, it is recommended that a complete controller be purchased and the old one returned to the factory for repairs. In such cases credit will be issued for all parts in usable condition. Such action will insure proper repairs and uninterrupted service.

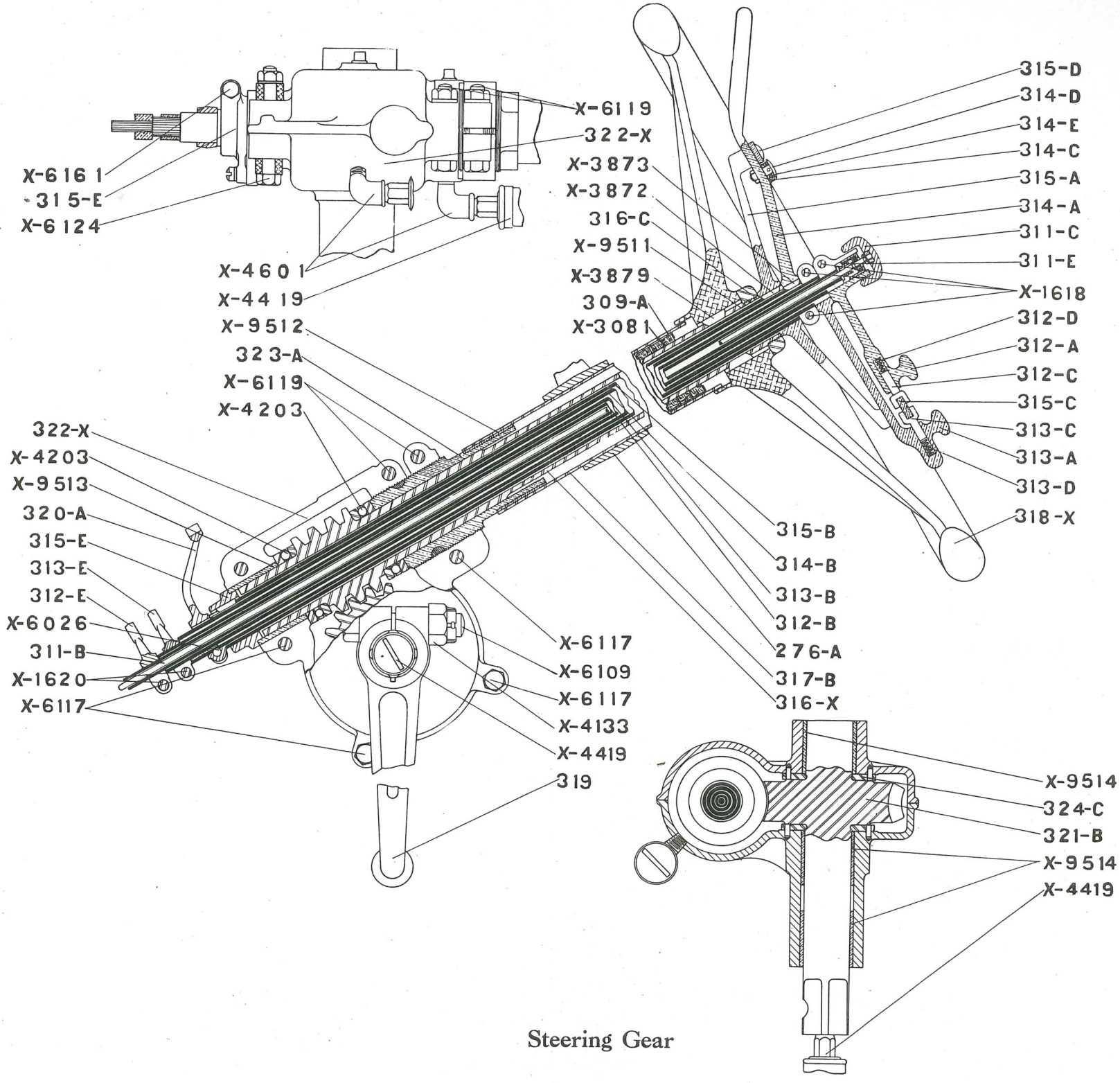

Steering Gear

Group Eight

Steering Gear Group

CODE WORD	PART No.	No. USED	NAME	PRICE EACH
Muhax	GA-300-X	1	**Steering gear complete**	$ 102.50
Muhae	GA-318-X	1	Steerling wheel complete, consisting of rim and spider	12.00
Muhai	GA-315-B	1	**Controller dial anchor tube with bushings.**	2.50
Muhao	X-9510	2	Controller dial anchor tube bushings	.35
Muhau	GA-315-E	1	Controller dial anchor tube clamp bracket	.75
Muhba	X-6161	1	Controller dial anchor tube clamp bracket clamp bolt	.10
Muhbe	X-3626	1	Controller dial anchor tube clamp bracket clamp bolt nut	.05
Muhbi	GA-315-C	1	Controller dial	1.25
Muhbo	GA-315-D	2	Controller dial screw	.15
Muhbu	GA-315-A	1	Controller dial bracket	2.00
Muhca	X-3872	2	Controller dial bracket key	.05
Muhce	GA-311-B	1	Horn push rod	.50
Muhci	GA-311-C	1	Horn push rod cap	.50
Muhco	GA-311-E	1	Horn push rod spring	.10
Muhcu	GA-314-B	1	**Controller lever tube with bushing.**	3.50
Muhda	X-9509	2	Controller lever tube bushings	.25
Muhde	GA-314-A	1	Controller lever	2.50
Muhdi	X-3873	1	Controller lever key	.05
Muhdo	X-1618	1	Controller lever clamp screw	.10
Muhdu	GA-314-C	1	Controller lever pawl	.75
Muhea	GA-314-D	1	Controller lever pawl screw	.25
Muhei	X-3537	1	Controller lever pawl screw nut	.05
Muheo	GA-314-E	1	Controller lever pawl spring	.10
Muheu	GA-313-B	1	**Gas control lever tube with bushings**	2.00
Muhfa	X-9508	2	Gas control lever tube bushings	.25
Muhfe	GA-313-A	1	Gas control lever, upper	1.00
Muhfi	X-1618	1	Gas control lever clamp screw	.10
Muhfo	GA-313-C	1	Gas control lever plunger	.25
Muhfu	GA-313-D	1	Gas control lever spring	.10
Muhga	GA-313-E	1	Gas control lever, lower	.50
Muhge	X-1620	1	Gas control lever clamp screw	.10
Muhgi	X-3541	1	Gas control lever clamp screw nut	.05
Muhgo	GA-312-B	1	**Spark control lever tube**	1.50
Muhgu	GA-312-A	1	Spark control lever, upper	1.00
Muhia	X-1618	1	Spark control lever clamp screw	.10
Muhie	GA-312-C	1	Spark control lever plunger	.25
Muhio	GA-312-D	1	Spark control lever spring	.10
Muhiu	GA-312-E	1	Spark control lever, lower	.50
Muhja	X-1620	1	Spark control lever clamp screw	.10
Muhje	X-3541	1	Spark control lever clamp screw nut	.05
Muhji	X-3879	2	Steering wheel key	.05
Muhjo	GA-316-X	1	**Steering post and worm** (sold only in set with GA-321-B)	12.50
Muhju	GA-321-B	1	**Steering worm wheel and shaft** (sold only in set with GA-316-X)	12.50
Muhka	X-9511	1	Steering post bushing	1.00
Muhke	GA-316-C	1	Steering post lock nut	.75
Muhki	GA-317-B	1	Steering post jacket with bushing	4.50
Muhko	X-9512	1	Steering post jacket bushing	1.00
Muhku	GA-309-A	1	Steering post jacket packing casing	.25
Muhla	X-3081	3	Steering post jacket packing	.25
Muhle	GA-319	1	**Steering lever, lower**	2.50
Muhli	X-6109	1	Steering lever clamp bolt	.10
Muhlo	X-4133	1	Steering lever clamp bolt nut	.05
Muhlu	GA-320-A	1	Steering gear control gear	2.50
Muhma	X-3873	1	Steering gear control gear key	.05
Muhme	X-6026	1	Steering gear control gear lock bolt	.10
Muhmi	X-3671	1	Steering gear control gear lock bolt nut	.05
Muhmo	GA-323-A	1	Steering worm adjusting screw	5.00

Steering Gear Group—Continued.

CODE WORD	PART No.	No. USED	NAME	PRICE EACH
Muhna	X-4419	1	Steering worm wheel grease cup	$ .50
Muhne	X-4203	2	Thrust bearing	6.75
Muhni	GA-322-X	1	Steering chuck with bushings	16.00
Muhno	X-9514	3	Steering worm wheel bushings	1.00
Muhnu	X-9513	1	Steering post bushing, lower	1.00
Muhoa	X-6119	2	Steering chuck bolt, long	.10
Muhoe	X-6117	4	Steering chuck bolt, short	.10
Muhoi	X-3540	6	Steering chuck bolt nut	.05
Muhou	X-4419	2	Steering chuck grease cup	.50
Muhpa	X-4601	2	Steering chuck grease cup elbow	.10
Muhpe	GA-324-C	2	Steering gear thrust washer	.75
Muhpi	GA-324-D	4	Steering gear thrust washer pin	.05
Muhpo	GA-276-A	1	Steering gear adjustable bracket (steering gear)	.75
Muhpu	GA-276-B	1	Steering gear adjustable link	.25
Muhqa	X-1183	1	Steering gear adjustable bracket clamp bolt	.15
Muhqe	X-3625	1	Steering gear adjustable bracket clamp bolt nut	.05
Muhqi	X-6203	2	Steering gear adjustable link bolt	.10
Muhqo	X-3626	2	Steering gear adjustable link bolt nut	.05
Muhqu	GA-277-X	1	Steering gear support tube with brackets	5.00
Muhra	X-6159	6	Steering gear support tube bolt	.10
Muhre	X-3626	6	Steering gear support tube bolt nut	05
Muhri	GA-275-A	1	Frame bracket	2.00
Muhro	X-6162	4	Frame bracket bolt	.10
Muhru	X-3626	4	Frame bracket bolt nut	.05
Muhsa	X-6121	1	Frame bracket clamp bolt	.35
Muhse	X-4132	1	Frame bracket clamp bolt nut	.05

Group Eight—A

Spark Advance Countershaft Group

CODE WORD	PART No.	No. USED	NAME	PRICE EACH
Muhsi	GA-185-B	1	**Spark advance countershaft**	$ .50
Muhso	GA-185-D	1	Spark advance countershaft spacer, long	.10
Muhsu	GA-185-E	1	Spark advance countershaft spacer, short	.10
Muhta	GA-185-A	1	Spark advance lever, left hand	1.00
Muhtl	GA-185-C	1	Spark advance lever, right hand	1.00
Muhti	X-6055	2	Spark advance lever clamp bolt	.10
Muhto	X-3671	2	Spark advance lever clamp bolt nut	.05
Muhtu	GA-188-B	1	Spark advance bell crank	1.50
Muhua	GA-188-C	1	Spark advance bell crank stud	.15
Muhue	X-3625	1	Spark advance bell crank stud nut	.05
Muhui	GA-188-A	1	Spark advance bell crank bracket	.75
Muhuo	X-6069	1	Spark advance bell crank bracket bolt, long	.10
Muhva	X-6056	1	Spark advance bell crank bracket bolt, short	.10
Muhve	X-3671	2	Spark advance bell crank bracket bolt, nut	.05

Spark Control Rods

CODE WORD	PART No.	No. USED	NAME	PRICE EACH
Muhvi	GA-184	1	Spark control rod, left hand, steering gear to countershaft	$ .15
Muhvo	GA-186	1	Spark control rod, right hand, countershaft to bell crank	.15
Muhwa	GA-187	1	Spark control rod, right hand, bell crank to magneto	.10
Muhwe	GA-182	6	Spark control rod ball joint	.25
Muhwo	X-3687	6	Spark control rod ball joint nut	.05

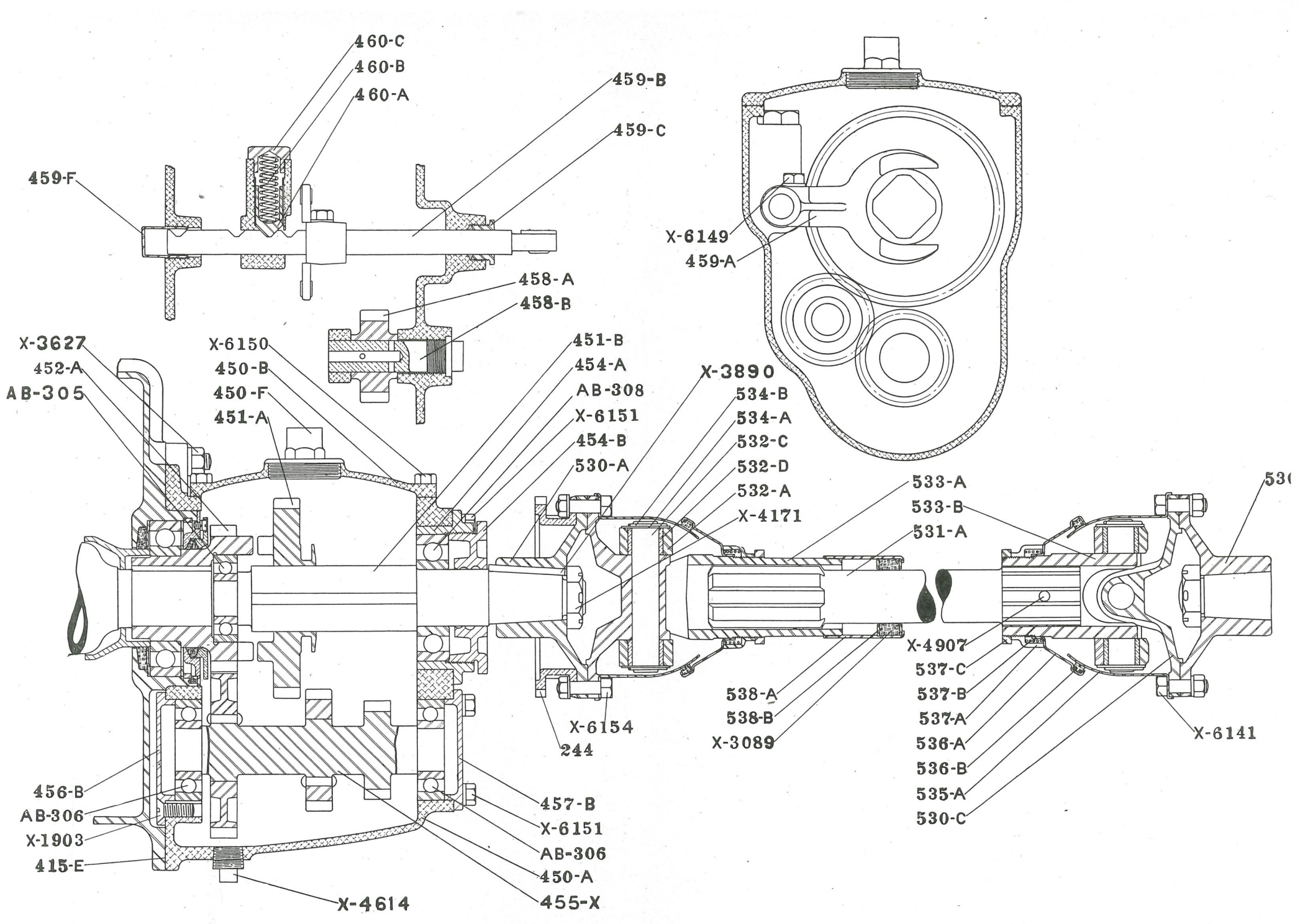

Reverse Gear—Propeller Shaft and Universal Joints

Group Nine

Reverse Gear Group

CODE WORD	PART No.	No. USED	NAME	PRICE EACH
Mujax	GA-450-X	1	**Reverse gear set complete with flange key and nut**	$ 121.50
Mujae	GB-450-A	1	**Gear case**	25.00
Mujai	GB-450-B	1	Gear case cover	3.00
Mujao	GB-450-F	1	Gear case cover cap with gauze	1.00
Mujau	X-6150	7	Gear case cover screw	.10
Mujba	X-4614	1	Gear case drain plug	.10
Mujbe	GB-451-B	1	**Drive shaft**	7.50
Mujbi	GB-451-A	1	Drive shaft sliding gear	7.50
Mujbo	AB-308	1	Drive shaft rear bearing	9.50
Mujbu	AB-305	1	Drive shaft front bearing	5.50
Mujca	GB-454-A	1	Drive shaft rear bearing housing	3.50
Mujce	X-6151	4	Drive shaft rear bearing housing screw	.10
Mujci	GB-454-B	1	Drive shaft rear bearing housing adj. ring	3.00
Mujco	GB-454-C	1	Drive shaft rear bearing housing adj. ring lock	.25
Mujcu	X-4171	1	Drive shaft rear nut	.30
Mujda	X-3890	1	Drive shaft rear key	.05
Mujde	GB-452-A	1	Driving clutch gear	11.50
Mujdi	GB-458-A	1	Reverse idler gear	3.75
Mujdo	GB-458-B	1	Reverse idler gear shaft	2.50
Mujdu	GB-455-X	1	**Countershaft with gears, complete without bearings**	17.50
Mujea	AB-306	2	Countershaft front and rear bearing	6.50
Mujei	GB-456-B	1	Countershaft front bearing cap	1.50
Mujeo	X-1903	4	Countershaft front bearing cap screw	.10
Mujeu	GB-457-B	1	Countershaft rear bearing cap	1.10
Mujfa	X-6151	4	Countershaft rear bearing cap screw	.10
Mujfe	GB-459-B	1	**Shifter rod**	2.75
Mujfi	GB-459-A	1	Shifter fork	3.00
Mujfo	X-6149	1	Shifter fork clamp screw	.15
Mujfu	GB-459-C	1	Shifter rod gland nut	.25
Mujha	GB-459-F	1	Shifter rod cap	.50
Mujhe	GB-460-A	1	Shifter rod plunger lock	.50
Mujhi	GB-460-B	1	Shifter rod plunger spring	.15
Mujho	GB-460-C	1	Shifter rod plunger cap	.30
Mujhu	X-3627	8	Motor field ring stud nuts for attaching reverse gear set	.05
Mujka	GB-415-E	1	Gasket between gear case and motor field ring.	.35
Mujke	GB-452-B	1	Drive gear retaining screw	.75

Group Ten

Propellor Shaft and Universal Joint Group

CODE WORD	PART No.	No. USED	NAME	PRICE EACH
Mukax	GA-527-X	1	**Propellor shaft with front and rear universal joints complete, less companion flanges and bolts**	$ 35.00
Mukae	GB-528-X	1	**Front universal slip joint complete**	14.00
Mukai	GB-529-X	1	**Rear Universal joint, complete with propellor shaft**	21.00
Mukao	GB-530-C	2	Universal joint flange yoke	2.50
Mukau	GB-533-A	1	Universal joint slip yoke	4.25
Mukca	GB-538-A	1	Universol joint slip yoke dust cap	.35
Mukce	GB-538-B	2	Universal joint slip yoke dust cap washer	.05
Mukci	X-3089	1	Universal joint slip yoke dust cap packing	.20
Mukco	GB-533-B	1	Universal joint plain yoke	2.75
Mukcu	X-4907	1	Universal joint plain yoke pin	.10
Mukda	GB-535-A	2	Universal joint dust casing	1.00
Mukde	GB-536-A	2	Universal joint dust shutter	.40
Mukdi	GB-536-B	2	Universal joint dust shutter packing	.10
Mukdo	GB-537-A	2	Universal joint dust shutter nut	.50
Mukdu	GB-537-B	2	Universal joint dust shutter adjusting spring	.15
Mukea	GB-537-C	2	Universal joint dust shutter lock nut	.40
Mukei	GB-532-A	2	Universal joint bearing ring	2.75
Mukeo	GB-532-D	8	Universal joint bearing ring bushing	.40
Mukeu	GB-532-C	2	Universal joint bearing drive pin	.40
Mukfa	GB-534-A	8	Universal Joint bearing end pin washer	.05
Mukfe	GB-534-B	8	Universal joint bearing end pin lock ring	.05
Mukfi	GB-535-B	2	Universal joint dust casing grease plug	.25
Mukfo	GA-531-A	1	**Propellor shaft**	8.50

FASTENINGS FOR PROPELLOR SHAFT AND JOINTS

Mukfu	GB-530-A	1	Forward joint companion flange	$ 2.50
Mukga	X-6154	6	Forward joint companion flange bolt	.10
Mukge	GA-530-B	1	Rear joint companion flange	2.50
Mukgi	X-6141	6	Rear joint companion flange bolt	.10
Mukgo	X-3625	12	Companion flange nut	.05

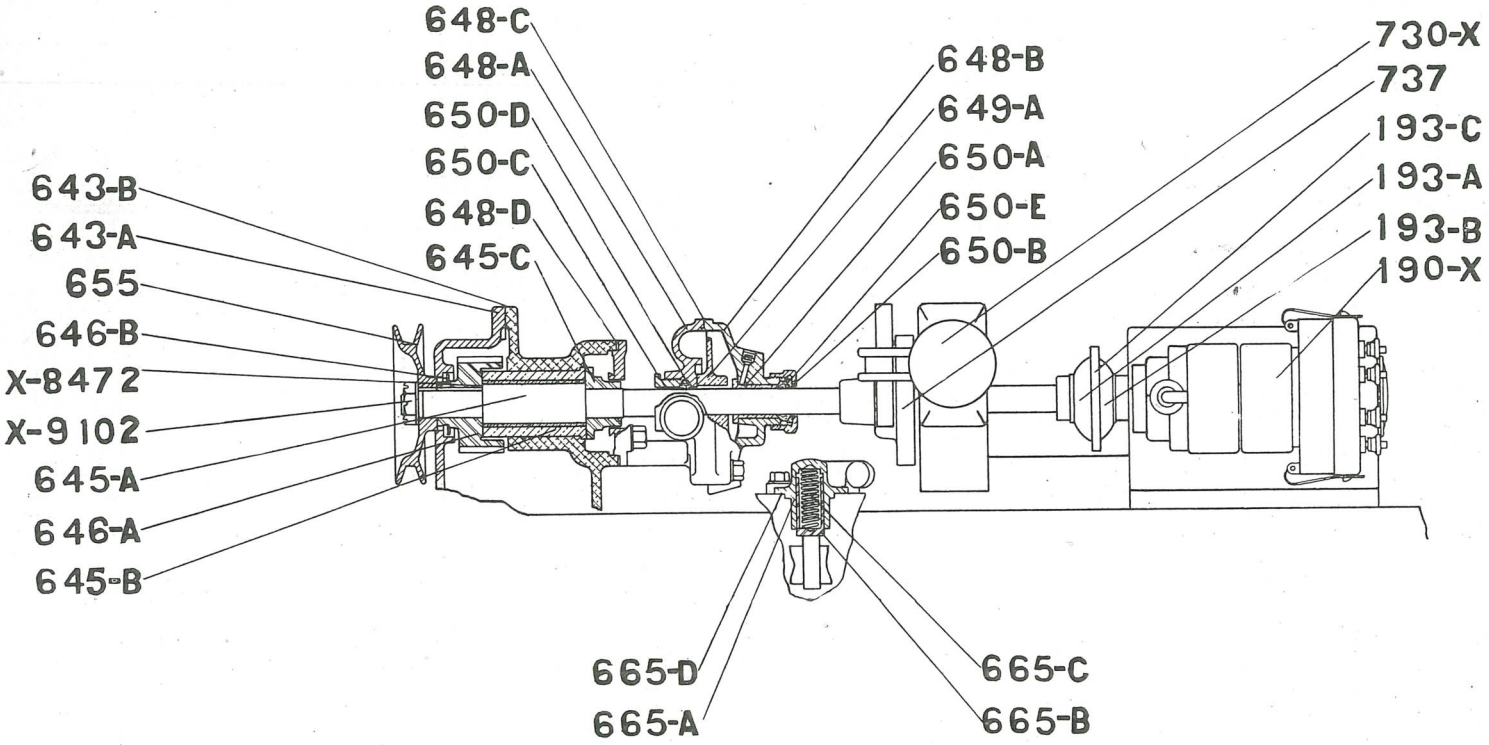

Water Pump and Magneto Drive Shaft

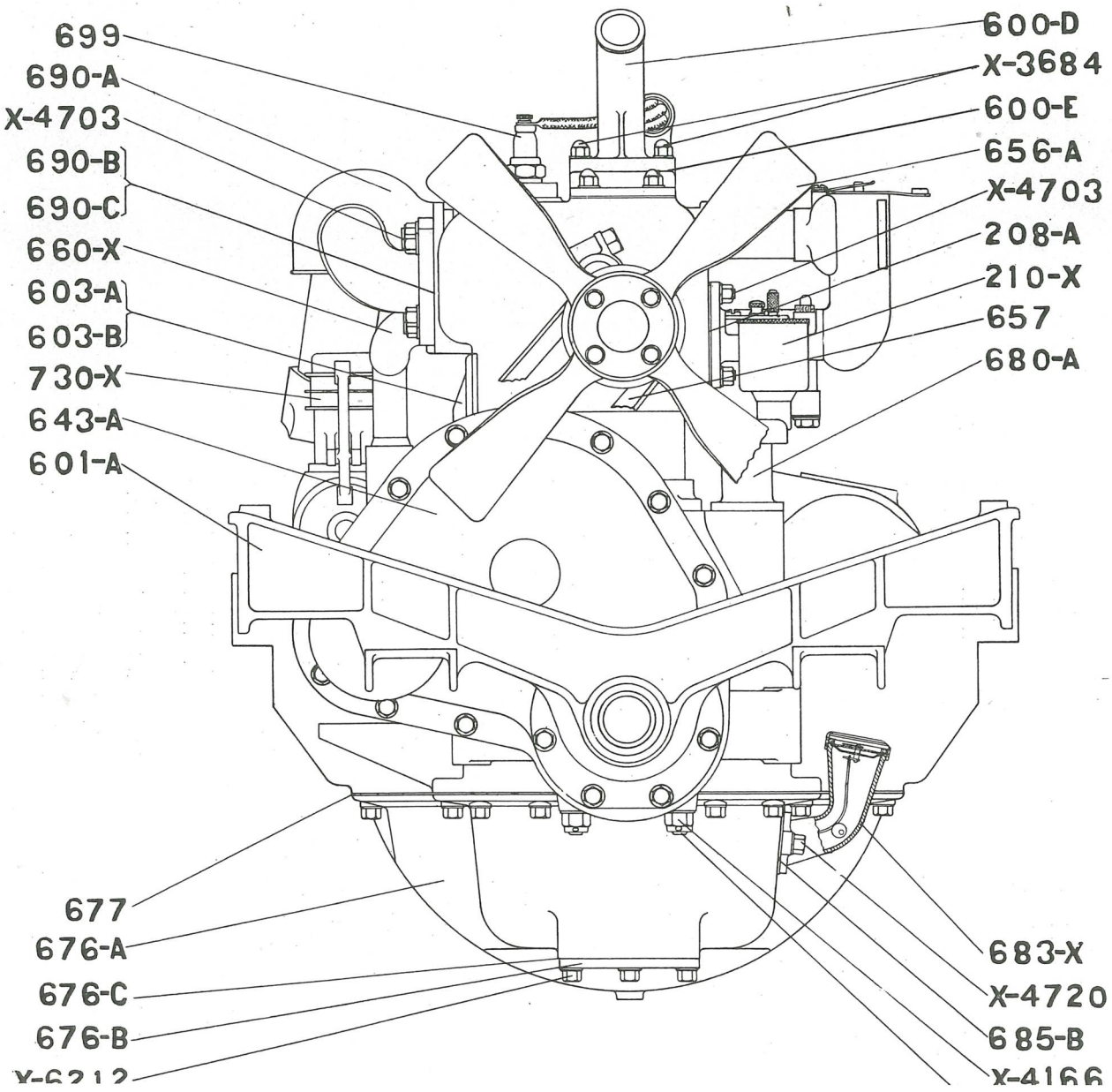

Group Eleven

Reverse Gear and Hand Brake Lever Group

CODE WORD	PART No.	No. USED	NAME	PRICE EACH
Mulae	GA-325-A	1	**Reverse gear shift lever only**	$ 5.00
Mulai	X-6120	1	Reverse gear shift lever clamp bolt	.10
Mulao	X-4122	1	Reverse gear shift lever clamp bolt nut	.05
Mulau	X-3875	1	Reverse gear shift lever key	.05
Mulba	GA-325-C	1	**Reverse gear shift lever latch**	1.50
Mulbe	GA-325-B	1	Reverse gear shift lever latch rod	.35
Mulbi	GA-325-D	1	Reverse gear shift lever latch rod end	.35
Mulbo	GA-325-E	1	Reverse gear shift lever latch spring	.15
Mulbu	GA-326-F	2	Reverse gear shift lever latch guide screw	.15
Mulca	X-4157	2	Reverse gear shift lever latch guide screw nut	.05
Mulce	GA-330	1	Reverse gear shift lever sector	1.00
Mulci	GA-328-B	1	**Reverse gear shift lever shaft**	1.00
Mulco	GA-328-C	1	Reverse gear shift lever shaft lever	1.25
Mulcu	X-1036	1	Reverse gear shift lever shaft lever clamp bolt	.10
Mulda	X-3625	1	Reverse gear shift lever shaft lever clamp bolt nut	.05
Mulde	X-3875	1	Reverse gear shift lever shaft key	.05
Muldi	GA-339	1	**Reverse gear shifting rod**	.25
Muldo	X-3685	1	Reverse gear shifting rod lock nut	.05
Muldu	GA-348	2	Reverse gear shifting rod clevis	.75
Mulea	X-5210	2	Reverse gear shifting rod clevis pin	.10
Mulei	GA-337-B	1	Reverse gear shifting rod fulcrum lever with bushing	1.50
Muleo	X-9518	1	Reverse gear shifting rod fulcrum lever bushing	.35
Muleu	GA-337-A	1	Reverse gear shifting rod fulcrum lever bracket	.50
Mulfa	X-1179	4	Reverse gear shifting rod fulcrum lever bracket bolt	.10
Mulfe	X-3626	4	Reverse gear shifting rod fulcrum lever bracket bolt nut	.05
Mulfd	X-4133	1	Reverse gear shifting rod fulcrum lever bracket slotted nut	.15
Mulfg	X-4419	1	Reverse gear shifting rod fulcrum lever bracket grease cup	.50
Mulfi	GA-337-C	1	Reverse gear shifting rod fulcrum lever stud	.25
Mulfo	GA-348	1	Reverse gear shifting rod fulcrum clevis, female	.75
Mulfu	GA-349	1	Reverse gear shifting rod fulcrum clevis, male	.75
Mulga	X-5210	2	Reverse gear shifting rod fulcrum clevis pin	.10
Mulge	GA-356-A	1	Reverse gear shifting rod fulcrum brace	.75
Mulgi	X-6159	1	Reverse gear shifting rod fulcrum brace bolt	.10
Mulgo	X-3626	1	Reverse gear shifting rod fulcrum brace bolt nut	.05
Mulgu	GA-326-A	1	**Hand brake lever only**	5.00
Mulha	X-6120	1	Hand brake lever clamp bolt	.10
Mulhe	X-4122	1	Hand brake lever clamp bolt nut	.05
Mulhi	X-3883	1	Hand brake lever key	.05
Mulho	GA-326-D	1	Hand brake lever spoon	1.25
Mulhu	X-5207	2	Hand brake lever spoon pin	.10
Mulia	GA-326-C	1	**Hand brake lever latch**	1.50
Mulie	GA-326-B	1	Hand brake lever latch rod	.35
Mulio	GA-326-G	1	Hand brake lever latch rod end	.35

Reverse Gear and Hand Brake Lever Group—Continued

CODE WORD	PART No.	No. USED	NAME	PRICE EACH
Mulja	GA-326-E	1	Hand brake lever latch spring	$ .15
Mulje	GA-326-F	2	Hand brake lever latch guide screw	.15
Mulji	X-4157	2	Hand brake lever latch guide screw nut	.05
Muljo	GA-329	1	Hand brake lever sector	1.00
Mulju	X-6108	2	Hand brake lever sector bolt	.10
Mulka	X-3625	2	Hand brake lever sector bolt nut	.05
Mulke	GA-331-B	1	Hand brake lever shaft with bushings	2.00
Mulki	X-9517	2	Hand brake lever shaft bushing	.35
Mulko	GA-331-C	1	Hand brake lever shaft lever	1.50
Mulku	X-1036	1	Hand brake lever shaft lever clamp bolt	.10
Mulma	X-3625	1	Hand brake lever shaft lever clamp bolt nut	.05
Mulme	X-3883	1	Hand brake lever shaft key	.05
Mulmi	GA-327-A	1	Sector bracket with bushing	2.00
Mulmo	X-9519	1	Sector bracket bushing	.50
Muloa	X-1179	4	Sector bracket bolt	.10
Muloe	X-3626	4	Sector bracket bolt nut	.05
Muloi	GA-327-B	1	Inner bracket with bushing	2.50
Mulou	X-9516	1	Inner bracket bushing	.50
Mulpa	X-4427	1	Inner bracket oiler	.25
Mulpe	X-1179	4	Inner bracket bolt	.10
Mulpo	X-3626	4	Inner bracket bolt nut	.05

Group Eleven—A

Foot Brake Lever Group

CODE WORD	PART No.	No. USED	NAME	PRICE EACH
Mulqa	GA-362-A	1	Foot brake lever	$ 5.50
Mulqe	GA-361-A	1	Foot brake lever pad	.75
Mulqi	GA-361-B	1	Foot brake lever rod	.50
Mulqo	GA-361-C	1	Foot brake lever pin	.05
Mulqu	GA-361-D	1	Foot brake lever rubber pad	.25
Mulra	X-1061	1	Foot brake lever bolt, long	.10
Mulre	X-1081	1	Foot brake lever bolt, short	.05
Mulri	X-3626	2	Foot brake lever bolt nut	.05
Mulro	X-3860	1	Foot brake lever key	.05
Mulru	GA-362-B	1	Foot brake shaft	.75
Mulsa	GA-362-C	1	Foot brake shaft lever	1.75
Mulse	X-6163	1	Foot brake shaft lever clamp bolt	.10
Mulsi	X-3626	1	Foot brake shaft lever clamp bolt nut	.05
Mulso	X-3860	1	Foot brake shaft lever key	.05
Mulsu	GA-363	1	Foot brake shaft bracket with bushing	4.00
Multa	X-9501	1	Foot brake shaft bracket bushing	.75
Multe	X-4419	1	Foot brake shaft bracket grease cup	.50
			FASTENINGS FOR FOOT BRAKE LEVER	
Multi	X-6046	4	Foot brake shaft bracket bolt	$ .10
Multo	X-3626	4	Foot brake shaft bracket bolt nut	.05

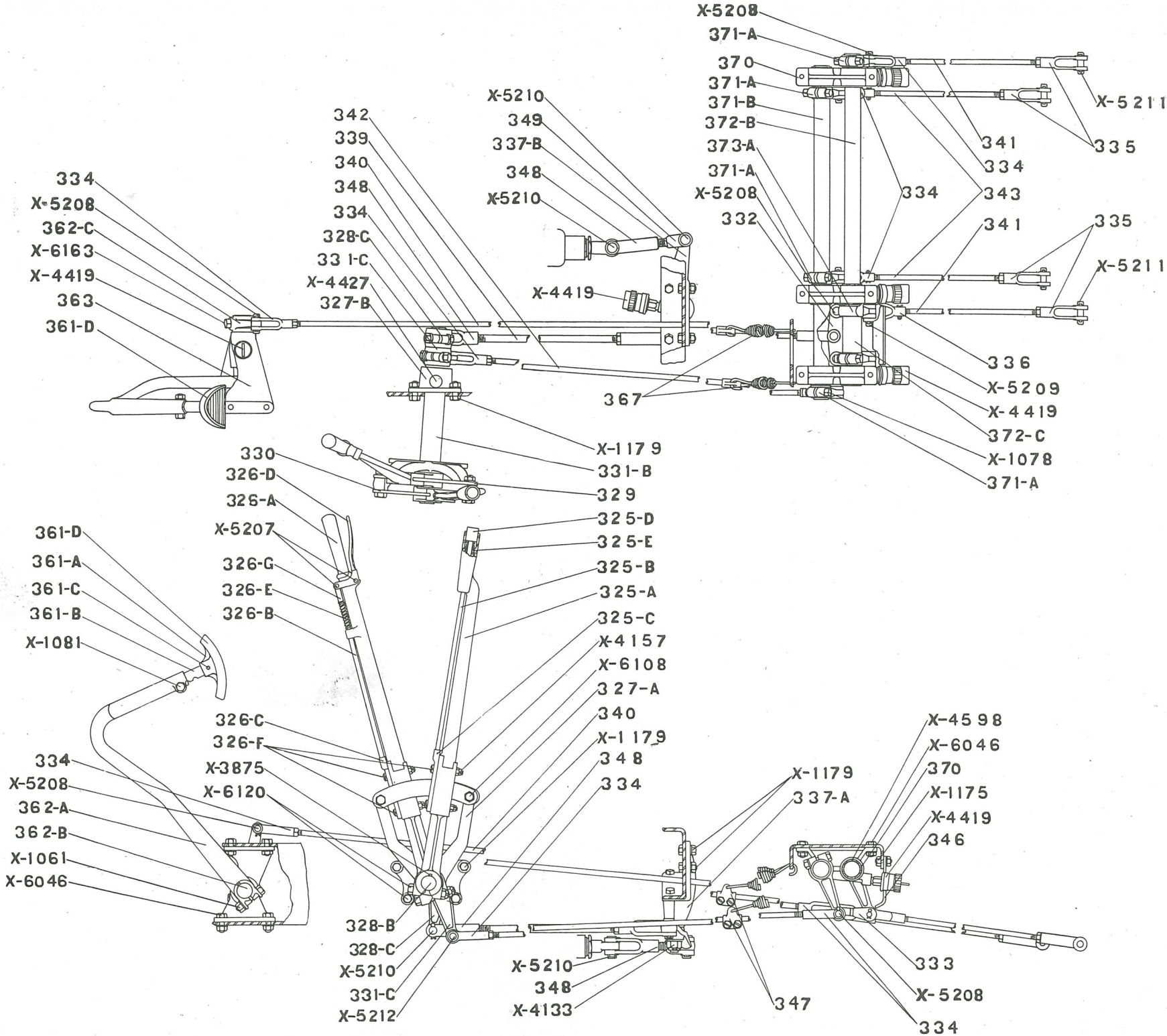

Hand Levers—Foot Brake—Countershaft and Rods

Group Eleven—B

Brake Countershaft and Rod Group

CODE WORD	PART No.	No. USED	NAME	PRICE EACH
Mumae	GA-371-B	1	**Hand brake countershaft**	$ 2.00
Mumai	GA-372-B	1	**Foot brake countershaft**	2.50
Mumao	GA-371-A	5	Brake countershaft lever	1.50
Mumau	X-1078	5	Brake countershaft lever clamp bolt	.10
Mumba	X-3626	5	Brake countershaft lever clamp bolt nut	.05
Mumbe	X-3860	5	Brake countershaft lever key	.05
Mumbi	GA-372-C	1	Brake countershaft spacer	.25
Mumbo	GA-373-A	1	Brake countershaft fulcrum lever with bushing	3.50
Mumbu	X-9520	1	Brake countershaft fulcrum lever bushing	.35
Mumca	GA-332	1	Brake equalizing bar	1.25
Mumce	GA-333	2	Brake equalizing bar double clevis	.75
Mumci	X-5208	3	Brake equalizing bar double clevis pin	.10
Mumco	GA-370	3	Brake countershaft bracket with bushing	2.50
Mumcu	X-4598	6	Brake countershaft bracket bushing	.35
Mumda	X-6046	6	Brake countershaft bracket bolt	.10
Mumde	X-3626	6	Brake countershaft bracket bolt nut	.05
Mumdi	X-4419	3	Grease cup	.50
Mumdo	GA-343	1	**Hand lever brake rod, front**	.25
Mumdu	X-3626	1	Hand lever brake rod lock nut	.05
Mumea	GA-334	2	Hand lever brake rod clevis	.75
Mumei	X-5208	1	Hand lever brake rod clevis pin, rear	.10
Mumeo	X-5212	1	Hand lever brake rod clevis pin, front	.10
Mumeu	GA-347	1	Brake spring anchor	.35
Mumfa	X-1185	2	Brake spring anchor cap screw	.05
Mumfe	GA-343	2	**Hand lever brake rod, rear**	.25
Mumfi	X-3626	2	Hand lever brake rod lock nut	.05
Mumfo	GA-334	2	Hand lever brake rod clevis, front	.75
Mumfu	GA-335	2	Hand lever brake rod clevis, rear	.75
Mumga	X-5208	2	Hand lever brake rod clevis pin, front	.10
Mumge	X-5211	2	Hand lever brake rod clevis pin, rear	.10
Mumgi	GA-340	1	**Foot lever brake rod, front**	.25
Mumgo	X-3626	1	Foot lever brake rod lock nut	.05
Mumgu	GA-334	2	Foot lever brake rod clevis	1.00
Mumha	X-5208	2	Foot lever brake rod clevis pin	.10
Mumhe	GA-347	1	Brake spring anchor	.25
Mumhi	X-1185	2	Brake spring anchor cap screw	.05
Mumho	GA-341	2	**Foot lever brake rod, rear**	.25
Mumhu	X-3626	2	Foot lever brake rod lock nut	.05
Mumja	GA-334	1	Foot lever brake rod clevis, right hand, front	1.00
Mumje	X-5208	1	Foot lever brake rod clevis pin	.10
Mumji	GA-335	2	Foot lever brake rod clevis, rear	1.00
Mumjo	X-5211	2	Foot lever brake rod clevis pin	.10
Mumju	GA-336	1	Foot lever brake rod clevis, left hand, front	1.00
Mumka	X-5209	1	Foot lever brake rod clevis pin	.10
Mumke	GA-367	2	Brake release spring	.10
Mumki	GA-346	1	Brake lever stop	.05
Mumko	X-1175	3	Brake lever stop bolt	.10
Mumku	X-3626	3	Brake lever stop bolt nut	.05

Group Twelve

Accelerator and Throttle Control Group

CODE WORD	PART No.	No. USED	NAME	PRICE EACH
Munae	GA-215-B	1	Accelerator push rod	$ .50
Munai	GA-215-C	1	Accelerator push rod button	.35
Munao	GA-215-A	1	Accelerator floor bracket	.75
Munau	GA-215-E	1	Accelerator spring	.10
Munba	GA-223-A	1	Accelerator foot rest bracket	.75
Munbe	GA-217-D	1	Tension spring anchor	.05
Munbi	GA-223-B	1	Accelerator foot rest bracket stud	.10
Munbo	X-3627	2	Accelerator foot rest bracket stud nut	.05
Munbu	X-8468	2	Accelerator foot rest bracket stud nut washer	.10
Munca	GA-216-A	1	Throttle bell crank	2.00
Munce	GA-216-B	1	Throttle bell crank stud	.10
Munci	GA-216-C	1	Throttle idler lever	.75
			THROTTLE CONTROL RODS	
Munco	GA-218	1	Throttle control rod (gear to bell crank)	$ .15
Muncu	GA-217-B	1	Throttle control rod (bell crank to throttle)	.25
Munda	GA-217-C	1	Throttle tension spring	.10
Munde	GA-217-D	1	Throttle tension spring anchor (bell crank)	.05
Mundi	GA-217-E	1	Throttle tension spring anchor (crank case)	.10
Mundo	GA-216-E	1	Throttle control rod shoe	.20
Munea	GA-219	1	Accelerator rod	.15
Munei	GA-182	4	Accelerator rod ball joint	.25
Muneo	X-3687	4	Accelerator rod ball joint nut	.05
Muneu	GA-183	1	Accelerator rod ball joint straight	.25

Group Thirteen

Muffler and Exhaust Group

CODE WORD	PART No.	No. USED	NAME	PRICE EACH
Muoax	GA-220-X	1	**Muffler complete**	$ 6.50
Muoae	GA-220-E	1	Muffler bracket, front	.20
Muoai	GA-220-F	1	Muffler bracket, rear	.20
Muoao	X-1175	4	Muffler bracket bolt	.10
Muoba	X-3626	4	Muffler bracket bolt nut	.05
Muobe	GA-221	1	**Exhaust pipe, front**	5.00
Muobi	X-6114	1	Exhaust pipe, front clamp bolt	.10
Muobo	X-3627	1	Exhaust pipe, front clamp bolt nut	.05
Muobu	X-6018	1	Exhaust pipe clamp bolt, rear	.25
Muoca	X-3625	1	Exhaust pipe front, clamp nut	.05
Muoce	GA-222-A	1	**Exhaust tail pipe**	3.50
Muoci	X-6018	1	Exhaust tail pipe clamp bolt	.25
Muoda	X-3625	1	Exhaust tail pipe clamp bolt nut	.05
Muode	GA-222-B	1	Exhaust tail pipe bracket	.25
Muodi	X-1175	2	Exhaust tail pipe bracket bolt	.10
Muodo	X-1163	1	Exhaust tail pipe bracket clamp bolt	.10
Muodu	X-3626	3	Exhaust tail pipe bracket clamp nut	.05

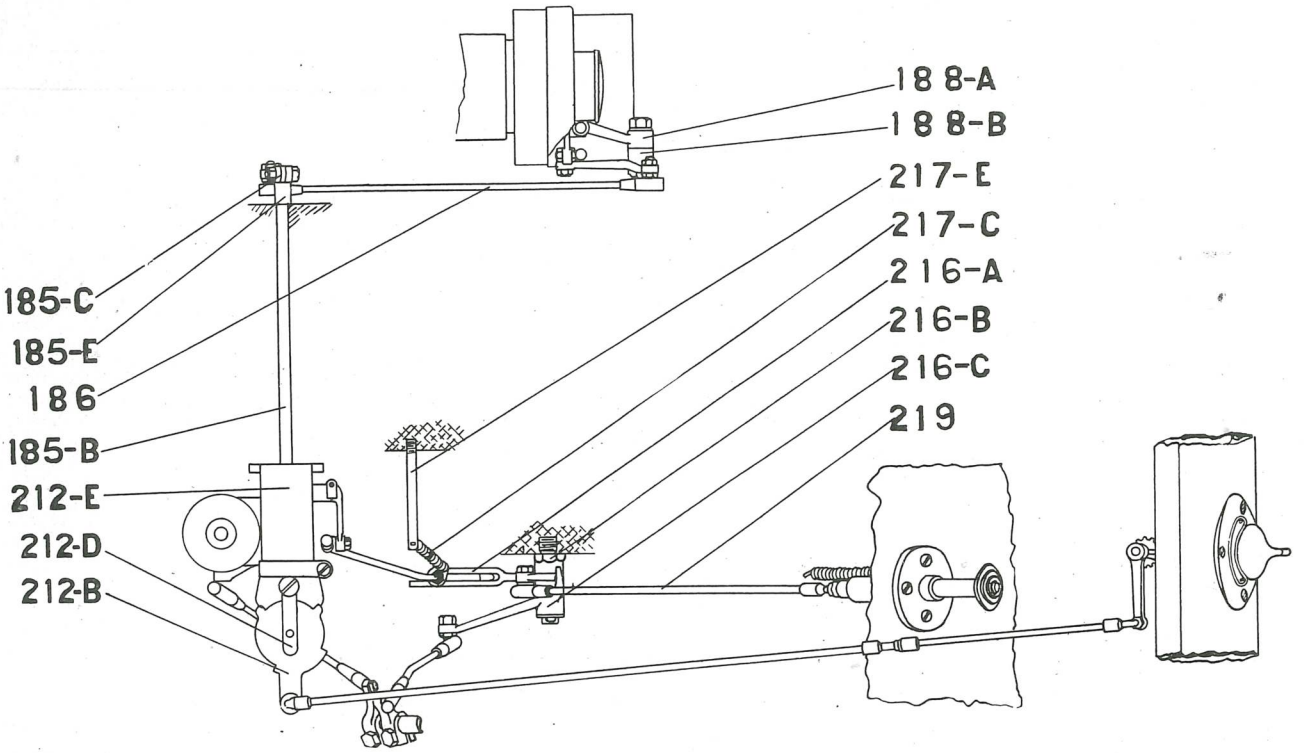
188-A
188-B
217-E
217-C
216-A
216-B
216-C
219
185-C
185-E
186
185-B
212-E
212-D
212-B

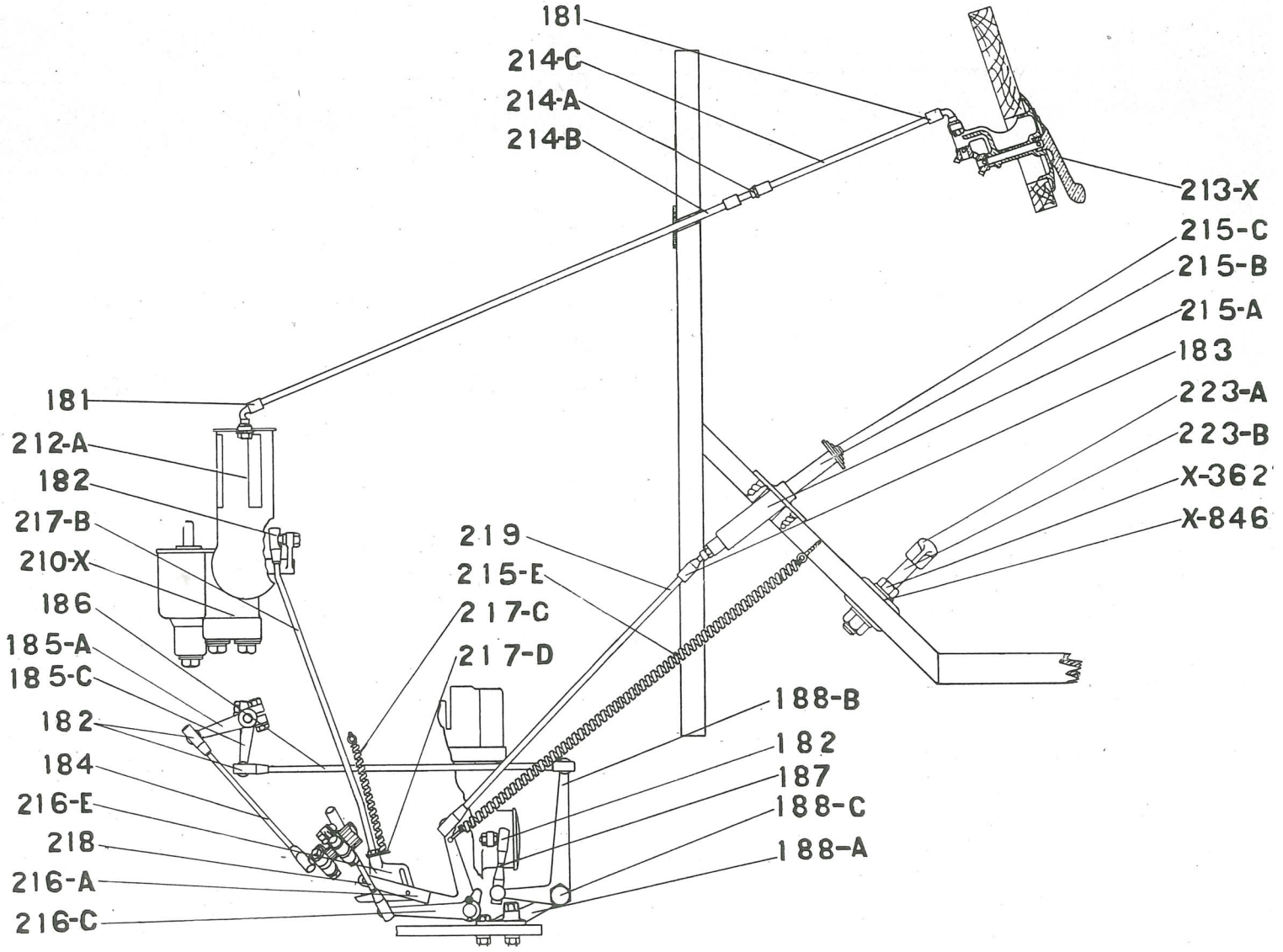
181
214-C
214-A
214-B
213-X
215-C
215-B
215-A
183
223-A
223-B
X-362
X-846
181
212-A
182
217-B
210-X
186
185-A
185-C
182
184
216-E
218
216-A
216-C
219
215-E
217-C
217-D
188-B
182
187
188-C
188-A

Group Fourteen

Gas Tank and Line

CODE WORD	PART No.	No. USED	NAME	PRICE EACH
Mupax	GA-801-X	1	**Gasoline tank with filler cap, gauge and fittings**	$ 20.00
Mupae	GA-808	1	Gasoline tank filler cap	1.00
Mupai	X-3144	1	Gasoline tank filler cap gasket	.15
Mupao	GA-807-X	1	Gasoline tank gauge complete, less cap and glass	2.00
Mupau	GA-807-L	1	Gasoline tank gauge glass	.25
Mupda	X-3139	1	Gasoline tank gauge packing	.15
Mupde	GA-807-M	1	Gasoline tank gauge cap	.75
Mupdi	GA-803-X	2	Gasoline tank strap complete with ends	1.50
Mupdo	GA-802-XR	1	Gasoline tank bracket with lining, right hand	.75
Mupdu	GA-802-XL	1	Gasoline tank bracket with lining, left hand	.75
Mupea	GA-802-B	2	Gasoline tank bracket lining	.10
Mupei	X-1162	2	Gasoline tank bracket bolt, front	.10
Mupeo	X-3625	2	Gasoline tank bracket bolt nut	.05
Mupeu	X-6199	2	Gasoline tank bracket bolt, rear	.10
Mupfa	X-3671	2	Gasoline tank bracket bolt nut	.05
Mupfe	GA-151-E	1	Cross angle	2.00
Mupfi	X-6159	2	Cross angle bolt	.10
Mupfe	X-3626	2	Cross angle bolt nut	.05
Mupfo	GB-125-X	1	Vacuum tank complete with plug and cock	10.00
			PIPE LINES WITH CONNECTIONS	
Mupfu	GA-126-B	1	Gasoline line, gas tank to vacuum	$ 2.50
Mupha	GA-127-B	1	Gasoline line, vacuum to intake manifold	.50
Muphe	GA-128-B	1	Gasoline line, vacuum to carburetor	.30
Muphi	X-4053	1	Gasoline line shut off cock	.50
Mupho	X-4051	2	Gasoline line elbow connection	.15
Muphu	X-4057	1	Gasoline line elbow connection	.15
Mupia	X-4052	1	Gasoline line connector (intake)	.15
Mupie	GA-129	5	Gasoline line clip	.05

Group Fifteen

Dash and Instrument Board

CODE WORD	PART No.	No. USED	NAME	PRICE EACH
Muqae	GA-700	1	**Dash board**	$ 3.50
Muqai	GA-701-AR	1	Dash board reinforcing plate, right hand	.50
Muqao	GA-701-AL	1	Dash board reinforcing plate, left hand	.50
Muqau	GA-702-R	1	Dash board bracket, right hand	1.00
Muqba	GA-702-L	1	Dash board bracket, left hand	1.00
Muqbe	X-1175	4	Dash board bracket bolt, short	.10
Muqbi	X-6161	2	Dash board bracket bolt, long	.10
Muqbo	X-3626	6	Dash board bracket bolt nut	.05
Muqbu	GA-705	1	**Instrument board**	7.50
Muqca	GA-703-R	1	Instrument board bracket, right hand	.75
Muqce	GA-703-L	1	Instrument board bracket, left hand	.75
Muqci	GB-230-X	1	Ammeter battery with shunt	15.00
Muqco	GA-231-X	1	Voltmeter with shunt	15.00
Muqcu	GA-233-X	1	Light switch	2.50
Muqda	GA-234-X	1	Ignition switch	10.00
Muqde	GA-213-X	1	Air control switch	7.50
Muqdi	GB-235-X	1	Clock	25.00
Muqdo	GA-229-X	1	Dash lamp socket complete	1.50
Muqdu	GA-240-X	1	Speedometer and parts complete	50.00
			Specify make and front wheel or propellor shaft drive. For repairs on speedometer see local agent.	
Muqea	GA-244	1	Speedometer drive gear	2.50

Group Fifteen—Continued

Air Control Switch Rod Group

CODE WORD	PART No.	No. USED	NAME	PRICE EACH
Muqei	GA-214-B	1	Control switch rod, long	$ .15
Muqeo	GA-214-C	1	Control switch rod, short	.10
Muqfa	GA-214-A	1	Control switch rod ball joint, center	.10
Muqfe	GA-181	2	Control switch rod ball joint, end	.10
Muqfi	X-3687	2	Control switch rod ball joint nut	.05

Group Sixteen

Battery Cradle Group

CODE WORD	PART No.	No. USED	NAME	PRICE EACH
Murax	GA-251-X	1	**Battery cradle complete**	$ 7.50
Murae	X-1175	10	Battery cradle bolt	.10
Murai	X-3626	10	Battery cradle bolt nut	.05
			BATTERY AND FASTENINGS	
Murao	GA-250-X	1	Battery (Exide)	$ 59.25
Murau	GA-252-A	2	Battery retainer clip	.25
Murba	GA-252-B	2	Battery retainer bolt	.10
Murbe	GA-252-C	2	Battery retainer bolt wing nut	.05
			The above for cars equipped with battery carried under body.	
Murbi	GAI-251-X	1	**Battery cradle complete**	10.00
Murbo	X-6159	5	Battery cradle bolt, short	.10
Murbu	X-1031	1	Battery cradle bolt, long	.10
Murca	X-3626	6	Battery cradle bolt nut	.05
Murce	GA1-251-G	1	Battery lead rubber bushing	.25
			BATTERY AND FASTENINGS	
Murci	GA1-250-X	1	Battery (Exide)	$ 59.25
Murco	GA1-252-A	2	Battery retainer clip	.25
Murda	GA1-252-B	2	Battery retainer bolt	.10
Murde	X-3671	2	Battery retainer bolt nut	.05
			The above for cars equipped with battery carried on side of chassis.	

Group Seventeen

Front and Rear Fenders with Irons

CODE WORD	PART No.	No. USED	NAME	PRICE EACH
Musae	GA-168-R	1	Front fender, right hand, for all models	$ 45.00
Musai	GA-168-L	1	Front fender, left hand, for all models	45.00
Musao	GA-169-R	1	Rear fender, right hand, for touring, limousine, and landaulet	45.00
Musau	GA-169-L	1	Rear fender, left hand, for touring, limousine, and landaulet	45.00
Musba	GAA-169-R	1	Rear fender, right hand, for coupe	45.00
Musbe	GAA-169-L	1	Rear fender, left hand, for coupe	45.00

The above parts painted in lead priming. If other painting is desired, give color and add 10 per cent to listed prices.

In ordering fenders with irons specify body serial number as well as chassis number. Repair fenders cannot be supplied for special custom built bodies.

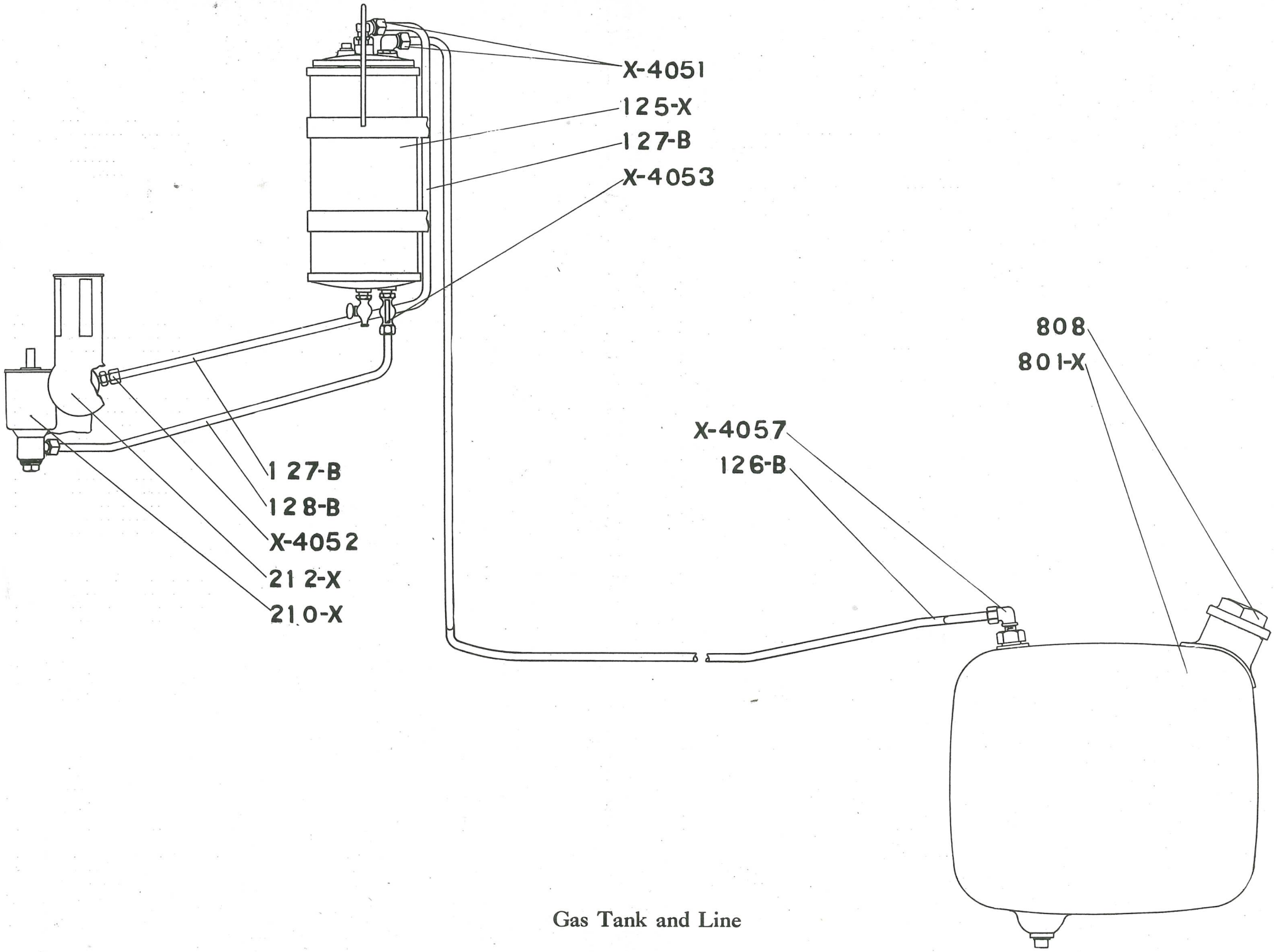

Gas Tank and Line

Group Eighteen

Running Board and Hangers

CODE WORD	PART No.	No. USED	NAME	PRICE EACH
Musbi	GA-173-XR	1	Running board, right hand, complete, give model for length	$ 10.00
Musbo	GA-173-XLR	1	Running board, left hand, rear, complete, give model for length	7.50
Musbu	GA-173-XLF	1	Running board, left hand, front, complete, give model for length	2.50
Musca	GA-179-A	1	Running board hanger iron, right hand, front	1.00
Musce	GA-179-B	2	Running board hanger iron, R.H.-2 L.H.-1	1.00
Musci	GA-179-C	2	Running board hanger iron, R.H.-3 L.H.-2	1.00
Musco	GA-179-D	2	Running board hanger iron, R.H.-4 L.H.-3	1.00
Musda	X-6111	28	Running board hanger iron bolt	.10
Musde	X-3625	28	Running board hanger iron bolt nut	.05

Running boards will only be furnished with covering and moulding complete ready for hanging.

Enclosures

CODE WORD	PART No.	No. USED	NAME	PRICE EACH
Mutae	GA-174-AR	1	Enclosure, right hand, for all models	$ 25.00
Mutai	GA-174-AL	1	Enclosure, left hand, for all models	25.00
Mutao	GA-174-B	1	Enclosure, left hand, battery cover, for all models	5.00

Engine Hood

CODE WORD	PART No.	No. USED	NAME	PRICE EACH
Mutau	GA-203-X	1	Engine hood (for touring and coupe)	$ 50.00
Mutca	GAC-203-X	1	Engine hood (limousine)	50.00
Mutce	GA-204-X	6	Engine hood and battery cover hold down	1.00
Mutci	GA-285	4	Engine hood guide	.25
Mutco	GA-255	4	Engine hood handle	.25
Mutea	GA-205-R	1	Engine hood sill, right hand	5.00
Mutei	GA-205-L	1	Engine hood sill, left hand	5.00
Muteo	GA-206	2	Engine hood sill angle	1.00

Engine Pan and Splasher

CODE WORD	PART No.	No. USED	NAME	PRICE EACH
Mutfa	GA-720-BR	1	Engine pan, right hand	$ 5.00
Mutfe	GA-720-BL	1	Engine pan, left hand	5.00
Mutfi	X-1729	7	Engine pan screw (engine)	.05
Mutfo	GA-720-A	1	Splasher	5.00

The above parts in lead priming. If other paint is desired, give color and add 10 per cent to listed prices.

In ordering enclosures specify body serial number, as well as chassis number. Repair enclosures cannot be supplied for special custom built bodies.

Group Nineteen

Electric Group—Miscellaneous

CODE WORD	PART No.	No. USED	NAME	PRICE EACH
Muwae	GA-558	7	Fuse (10 Amp. 250 Volt. ⅜"x1½")	$ .20
Muwai	GA-559	1	Fuse block (4 fuse)	1.00
Muwau	GB-559	1	Fuse block (3 fuse)	.75
Muwba	GA-553	1	Fuse block cover	2.00
Muwbe	X-2332	2	Fuse block cover bolt	.10
Muwbi	X-5651	2	Fuse block cover bolt wing nut	.20
Muwbo	GA-550-X	1	Power and lighting cable complete	30.00
Muwbu	GA-192-1	1	Magneto cable secondary cyl. No. 1	.50
Muwca	GA-192-2	1	Magneto cable secondary cyl. No. 2	.50
Muwce	GA-192-3	1	Magneto cable secondary cyl. No. 3	.50
Muwci	GA-192-4	1	Magneto cable secondary cyl. No. 4	.50
Muwco	GA-192-5	1	Magneto cable secondary cyl. No. 5	.50
Muwda	GA-192-6	1	Magneto cable secondary cyl. No. 6	.50
Muwde	GA-192-7	1	Magneto cable primary (magneto to switch)	.25
Muwdi	GA-192-8	1	Magneto cable primary (grounding wire)	.25

Electric Horn Group

CODE WORD	PART No.	No. USED	NAME	PRICE EACH
Muwea	GA-562-X	1	Electric horn complete with bracket	$ 12.00
Muwei	GA-563	1	Electric horn bracket	.25
Muweo	X-1175	3	Electric horn bracket bolt	.10
Muwfa	X-3626	3	Electric horn bracket nut	.05
Muwfe	GA-310-X	1	Electric horn push button switch complete	2.50
Muwfi	GA-311-A	1	Electric horn push button switch bracket	1.00

Group Twenty

Lamps and Brackets

CODE WORD	PART No.	No. USED	NAME	PRICE EACH
Muxae	GA-226	2	**Single head lamp without bulbs**	$ 7.50
Muxai	GA-226-L	2	Head lamp lens	.80
Muxao	GA-147-B	2	Head lamp lock nut	.75
Muxba	GA-147-AR	1	Head lamp bracket, right hand	3.50
Muxbe	GA-147-AL	1	Head lamp bracket, left hand	3.50
Muxbi	X-6058	8	Head lamp bracket bolt	.10
Muxbo	X-3626	8	Head lamp bracket bolt nut	.05
Muxca	GA-147-C	1	Head lamp bracket brace rod	.25
Muxce	X-3542	1	Head lamp bracket brace rod lock nut, right hand	.05
Muxci	X-3543	1	Head lamp bracket brace rod lock nut, left hand	.05
Muxco	GA-145	1	Front license bracket	2.00
Muxda	X-6174	2	Front license bracket bolt	.10
Muxde	X-3671	2	Front license bracket bolt nut	.05
Muxdi	GA-228	1	**Rear lamp without bulbs**	2.50
Muxdo	GA-228-L	1	Rear lamp lens	.50
Muxdu	GA-149	1	Rear lamp bracket	.75
Muxea	X-6161	2	Rear lamp bracket bolt	.10
Muxei	X-3626	2	Rear lamp bracket bolt nut	.05
Muxeo	GA-486	2	Head lamp bulb (G-16½-21 C. P.-12-16 volts)	.30
Muxfa	GA-487	2	Head lamp bulb dim (G-8-4 C. P.-12-16 volts)	.24
Muxfe	GA-488	2	Instrument board and tail lamp bulb (G-6-2 C. P.-12-16 volt)	.24

Charge Resistance Coil

CODE WORD	PART No.	No. USED	NAME	PRICE EACH
Muxfi	GA-560-X	1	Resistance coil complete with brackets	$ 10.00
Muxfo	GA-560-A	2	Resistance coil bracket	.25

Group Twenty-One

Special Tools and Equipment

CODE WORD	PART No.	NAME	PRICE EACH
Muyae	GA-225-X	Trouble lamp and cord	$ 2.00
Muyai	GA-558	Enclosed fuse 10 Amp. 250 Volt. ⅜"x1½"	.20
Muyao	GA-735-X	Tire pump hose with gauge	2.50
Muyba	X-5112	Magneto wrench and spacing gauge	.25
Muybe	X-5111	Carburetor jet wrench	.35
Muybi	GB-724	Hydrometer syringe (chargometer)	1.25
Muybo	X-5113	Hub cap and lock nut wrench (wood wheel)	1.00
Muyca	X-5110	Rim contracting tool (wood wheel)	1.00
Muyce	X-5109	Rim bolt socket wrench (wood wheel)	1.00
Muyci	X-5108	Hub cap wrench (wire wheel)	.80
Muyco	X-5106	Spoke wrench (wire wheel)	.25
Muyda	X-5103	Engine valve cap wrench	.50
Muyde	X-5114	Combination armature and gear puller for electric transmission (see Instruction Book, page 62)	Net 15.00

Group Twenty-Two

Body Fittings

CODE WORD	PART No.	NAME	PRICE EACH
Muzae	GA-236	Robe rail	$ 4.50
Muzai	GBC-1001	Mirror	5.00
Muzao	GBC-1002	Cigar lighter	4.50
Muzau	GBC-1003	Chauffeur Phone	25.00
Muzba	GBC-1004	Umbrella holder	2.50
Muzbe	GAC-1005	Clock	25.00
Muzbi	GBC-232	Dome light	3.50
Muzbo	GB-1249	Floor rug	15.00
Muzfa	GB-1250	Rubber mat	15.00
Muzfe	GA-750	Windshield (Rostand)	75.00
Muzfi	GA-740	Windshield (Auster)	100.00